DRAWING NO.	ISSUE NO.	
AB5060	1	A0
SHEET 1 OF 1		

CAD

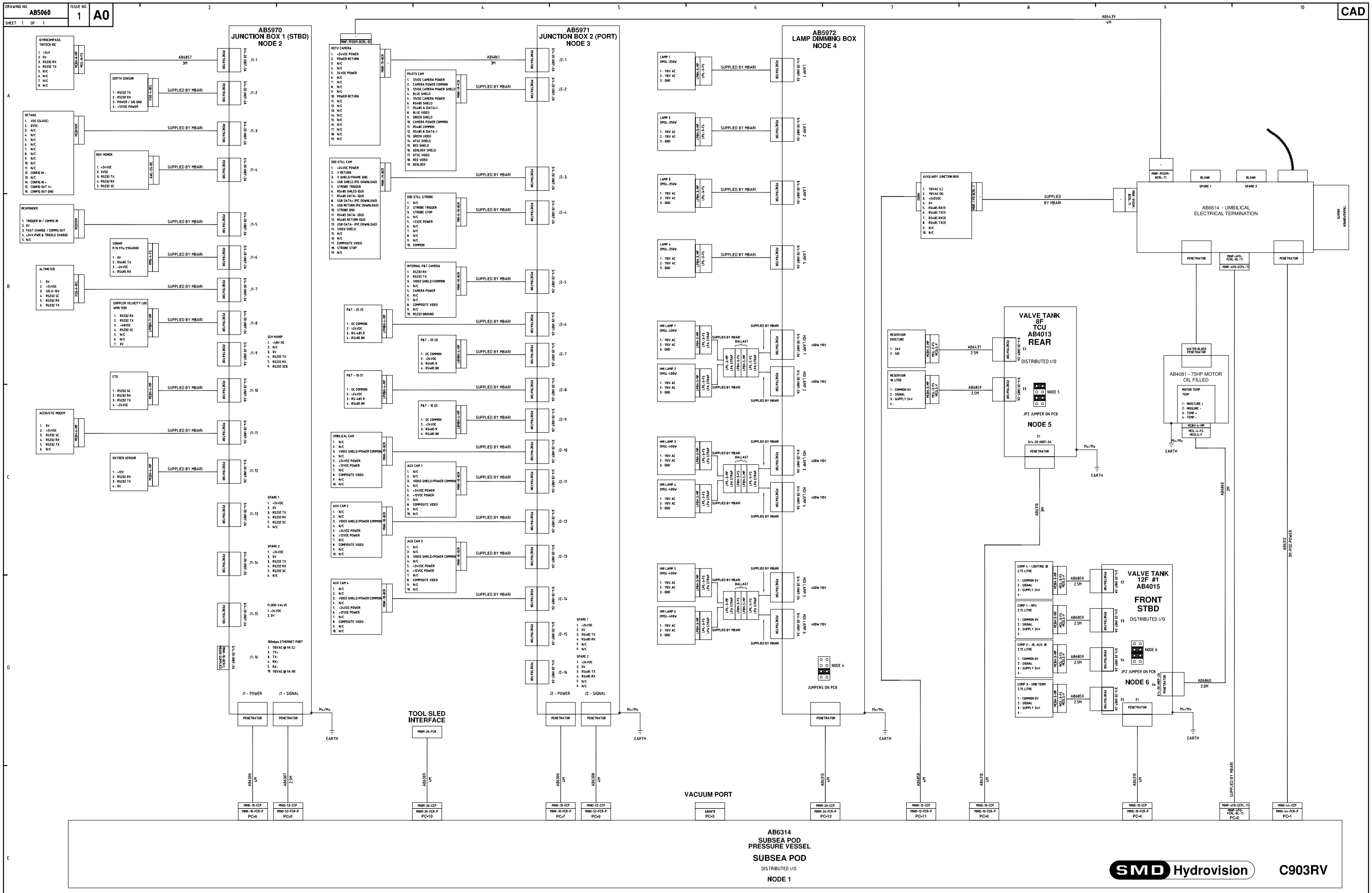

NO.	DATE	CHANGE	ZONE	DRAWN	CHECK
1	29.11.07	CHANGE TO PIN OUTS JB 1	N/A	C.L.T	I.M.P

MATERIAL	DIMENSIONS	SCALE	PROJECTION 3RD
-	mm	-	

DESIGNED	DRAWN	TOLERANCES UNLESS OTHERWISE STATED			
C.L.T	C.L.T	DIMENSION mm	UP TO 100	100 TO 300	300 TO 1000	OVER 1000
DATE	CHECKED	FABRICATION	± 1.0	± 1.5	± 2.0	± 3.0
25.06.07	T.S	MACHINED PART	± 0.15	± 0.4	± 0.8	± 1.0

TITLE: SUBSEA HARNESS G.A. - MBARI

DO NOT SCALE

DRAWING NO. AB5060 | ISSUE NO. 1 | SHEET 1 OF 1

Soil Machine Dynamics

ALL INTELLECTUAL PROPERTY RIGHTS SUBSISTING IN THESE DESIGNS ARE THE PROPERTY OF SOIL MACHINE DYNAMICS LTD. NO COPY IS TO BE MADE WITHOUT THE WRITTEN PERMISSION OF SOIL MACHINE DYNAMICS LTD. ANY PATENT APPLICATIONS, PATENTS AND/OR DESIGN APPLICATIONS, REGISTERED DESIGNS, DESIGN RIGHTS OR COPYRIGHT ARISING FROM OR CONTAINED IN THE DESIGNS ARE THE PROPERTY OF SOIL MACHINE DYNAMICS LTD AND ALL INFORMATION MUST BE HELD IN THE STRICTEST CONFIDENCE.