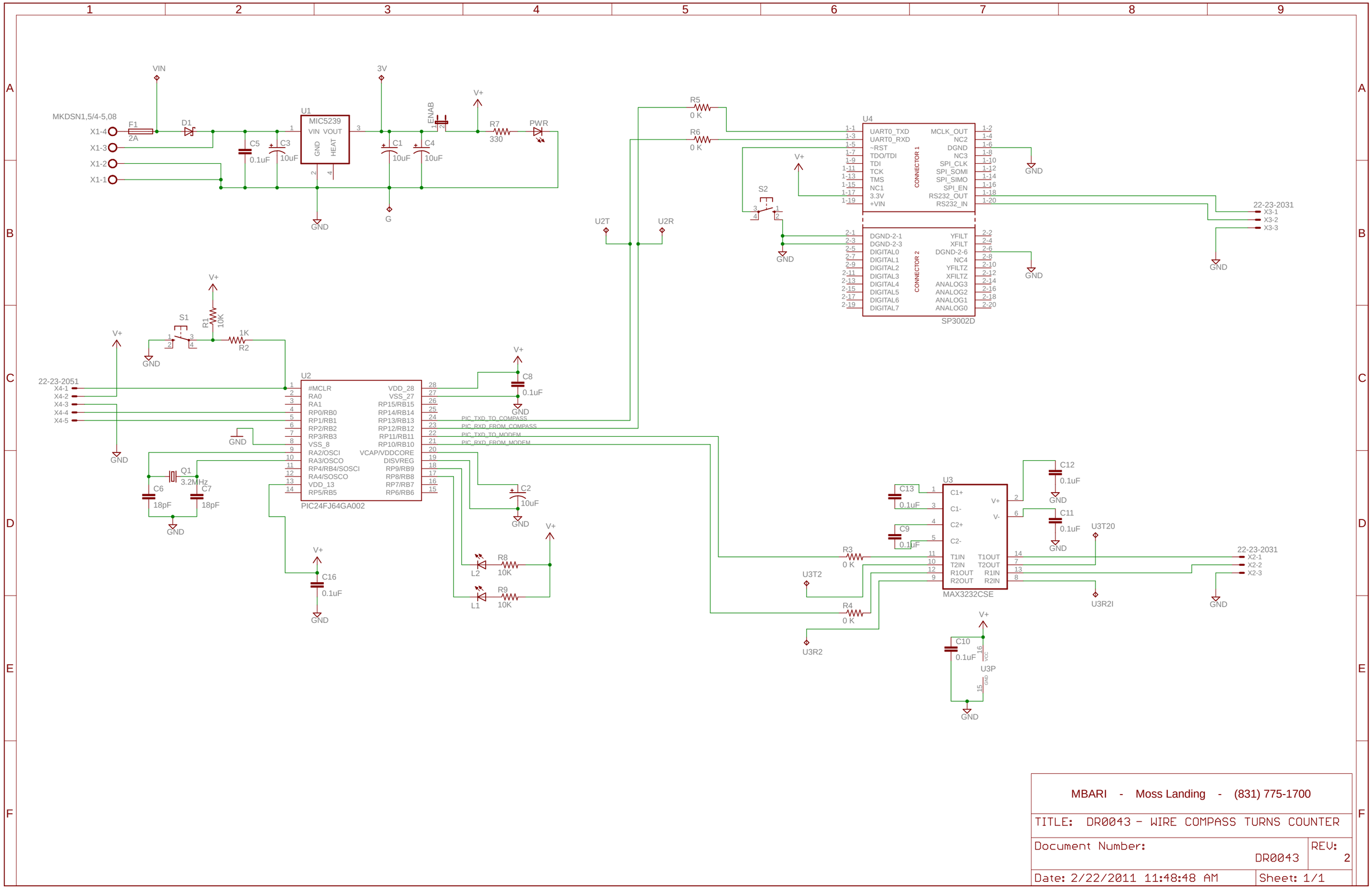

MBARI - Moss Landing - (831) 775-1700

TITLE: DR0043 - WIRE COMPASS TURNS COUNTER

Document Number: DR0043 REV: 2

Date: 2/22/2011 11:48:48 AM Sheet: 1/1