REV	DESCRIPTION	BY	DATE	ZONE
A	PRODUCTION RELEASE	M.S.	6/00	

NOTES:

1. MATERIAL: 6AL/4V TITANIUM, BK7 BOROSILICATE GLASS, DELRIN
2. WEIGHT: IN AIR 13.5 lb. (6.1 kg)
   IN WATER 5.8 lb. (2.6 kg)
3. OPERATING DEPTH: 6,000 METERS (20,000 ft)
4. TEMPERATURE: OPERATING −5°C TO 50°C (23°F TO 122°F)
   STORAGE −20°C TO 71°C (−4°F TO 160°F)
5. ELECTRICAL: CAMERA POWER 12VDC +1.0/−0.0 AT 450mA
   VIDEO OUTPUT 1.0 V pp COMPOSITE

(6) CAMERA CONNECTOR: BRANTNER SEACON MIN−K−19−BCR

FACE VIEW
MINK−19−BCR

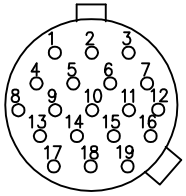

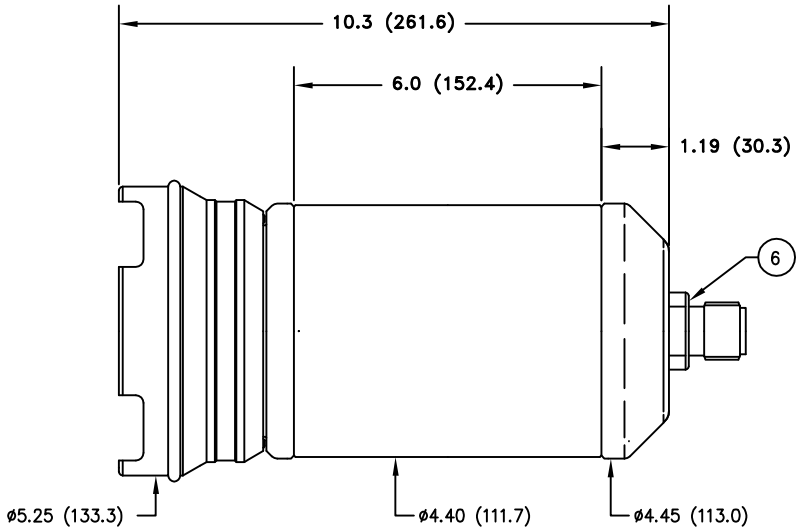

PIN	DESCRIPTION
1	12VDC CAMERA POWER
2	CAMERA POWER COMMON
3	12VDC CAMERA POWER SHIELD
4	BLUE SHIELD
5	12VDC CAMERA POWER
6	RS485 SHIELD
7	RS485 A (DATA+)
8	BLUE VIDEO
9	GREEN SHIELD
10	CAMERA POWER COMMON
11	RS485 COMMON
12	RS 485 B (DATA−)
13	GREEN VIDEO
14	NTSC SHIELD
15	RED SHIELD
16	GENLOCK SHIELD
17	NTSC VIDEO
18	RED VIDEO
19	GENLOCK

INSTALLATION DRAWING

INSITE PACIFIC Inc

SOLANA BEACH * CALIFORNIA * U.S.A. * TEL: 858-523-0642

UNLESS OTHERWISE SPECIFIED:

TOLERANCES:
.XX~ : ±.02
.XX : ±.01
.XXX : ±.005
HOLES : ±.003
ANGULAR : ±0.5°
FRACTIONAL : ±1/64

SURFACE FINISH 63
ALL DIMIENSIONS ARE IN INCHES (MM)
REMOVE ALL BURRS
BREAK ALL SHARP EDGES .02 − .03
DIMENSIONS APPLY BEFORE PLATING
DO NOT SCALE DRAWING

QTY PER	NEXT ASSEMBLY	USED ON APPLICATION
1		

MATERIAL	NOTED
SPECIFICATION	MBARI
FINISH	NOTED
PLATING	NOTED
ENG	G.H.
DRAW	M.SPEARMAN
CHECKED	
APPROVED	

SONY DXC−390 CAMERA
6,000 METER ; MIN−K−10−BCR

SIZE	DRAWING NO.	REV
B	DXC−390	A

DATE	SCALE	SHEET	OF
6/00	1 = 1	1	1