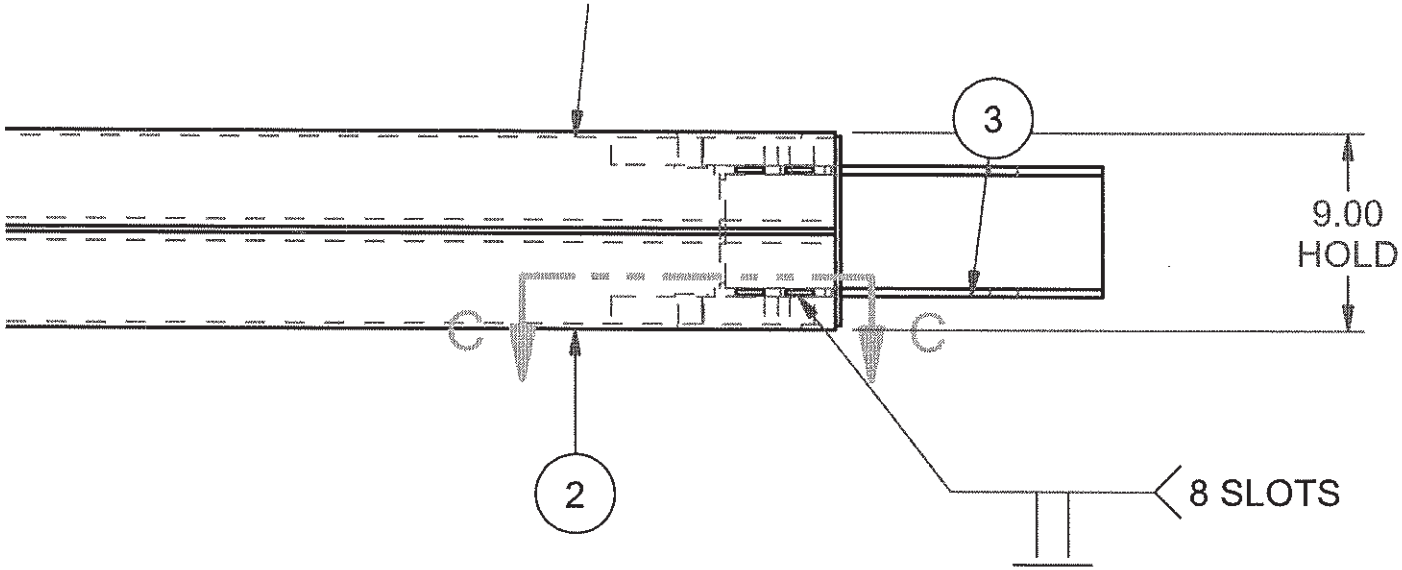
3
9.00
HOLD
C
C
2
8 SLOTS

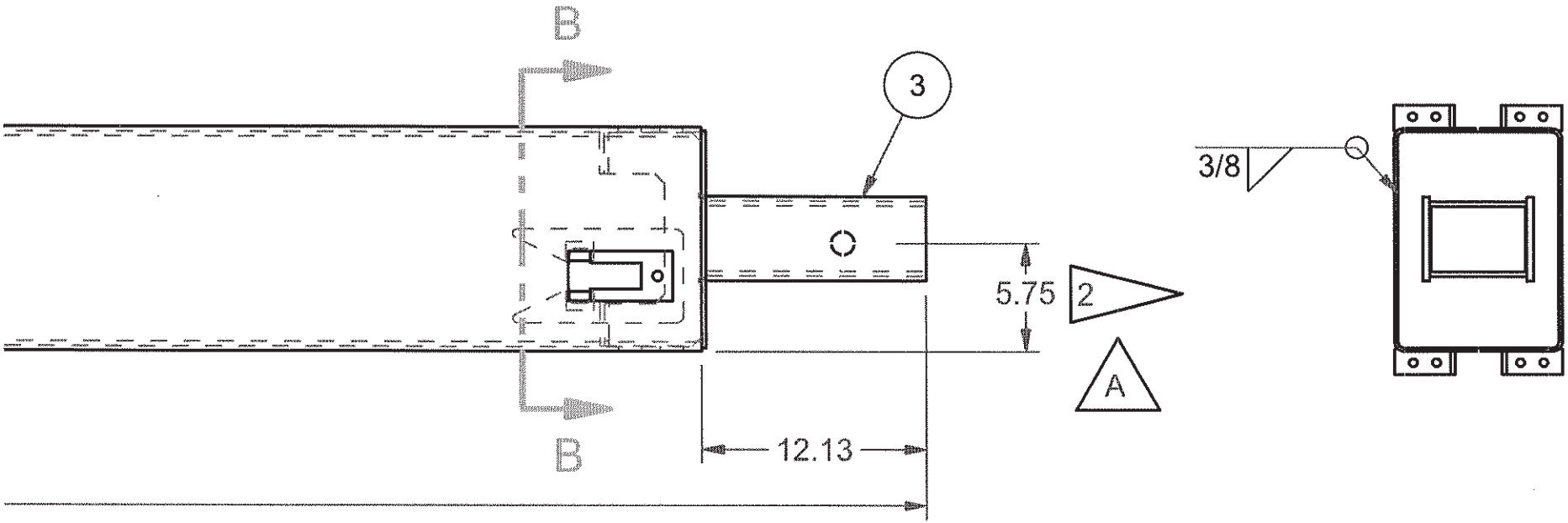
B
3
3/8
5.75
2
A
B
12.13