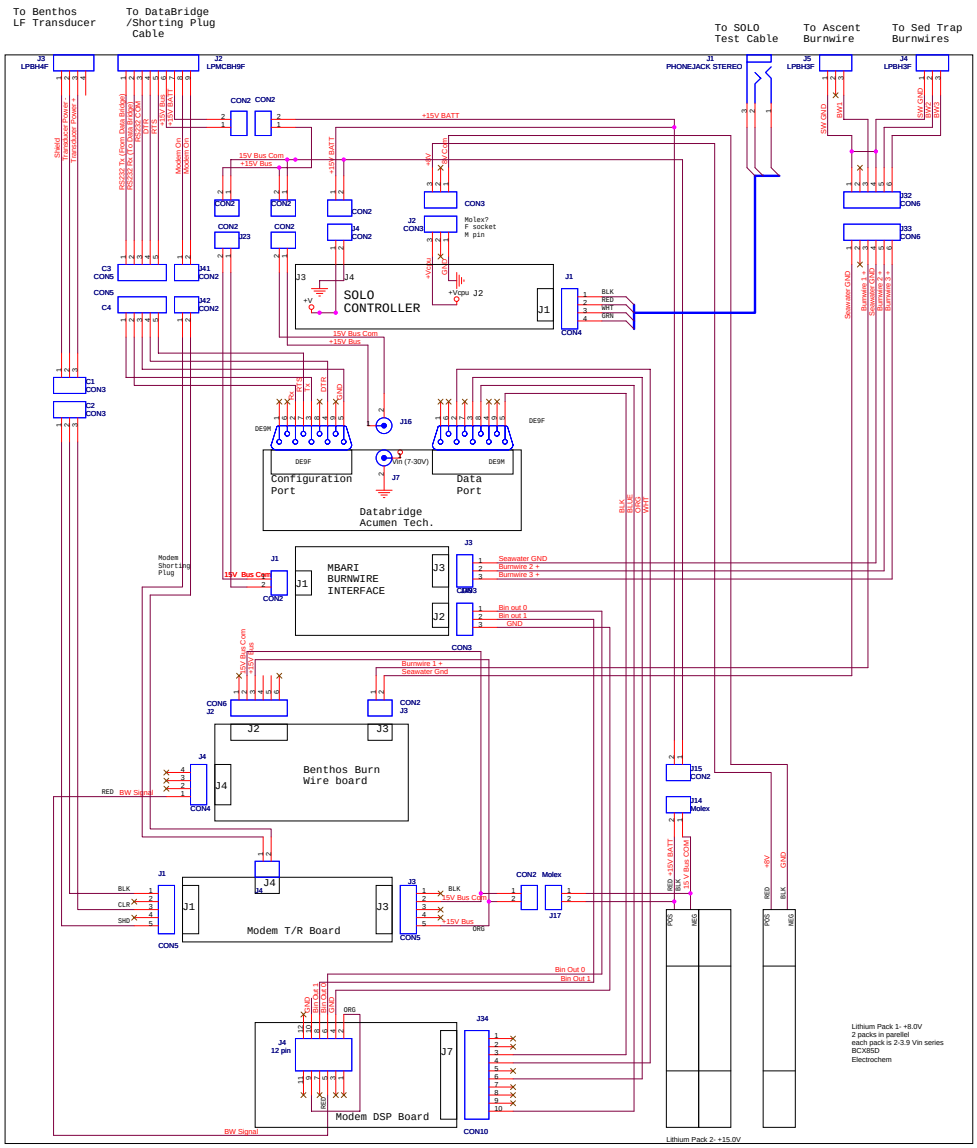
To Benthos LF Transducer
To DataBridge /Shorting Plug Cable
To SOLO Test Cable
To Ascent Burnwire
To Sed Trap Burnwires
J3 LPBH4F
J2 LPMCBH9F
J1 PHONEJACK STEREO
J5 LPBH3F
J4 LPBH3F
SOLO CONTROLLER
Configuration Port
Data Port
Databridge Acumen Tech.
MBARI BURNWIRE INTERFACE
Benthos Burn Wire board
Modem T/R Board
Modem DSP Board
Modem Shorting Plug
Molex? F socket M pin
Lithium Pack 1- +8.0V
2 packs in parellel
each pack is 2-3.9 Vin series
BCX85D
Electrochem
Lithium Pack 2- +15.0V
Engineer: Alana Sherman, x1780
LST: Electronics Chassis
Document Number 10020221
Thursday, December 18, 2008