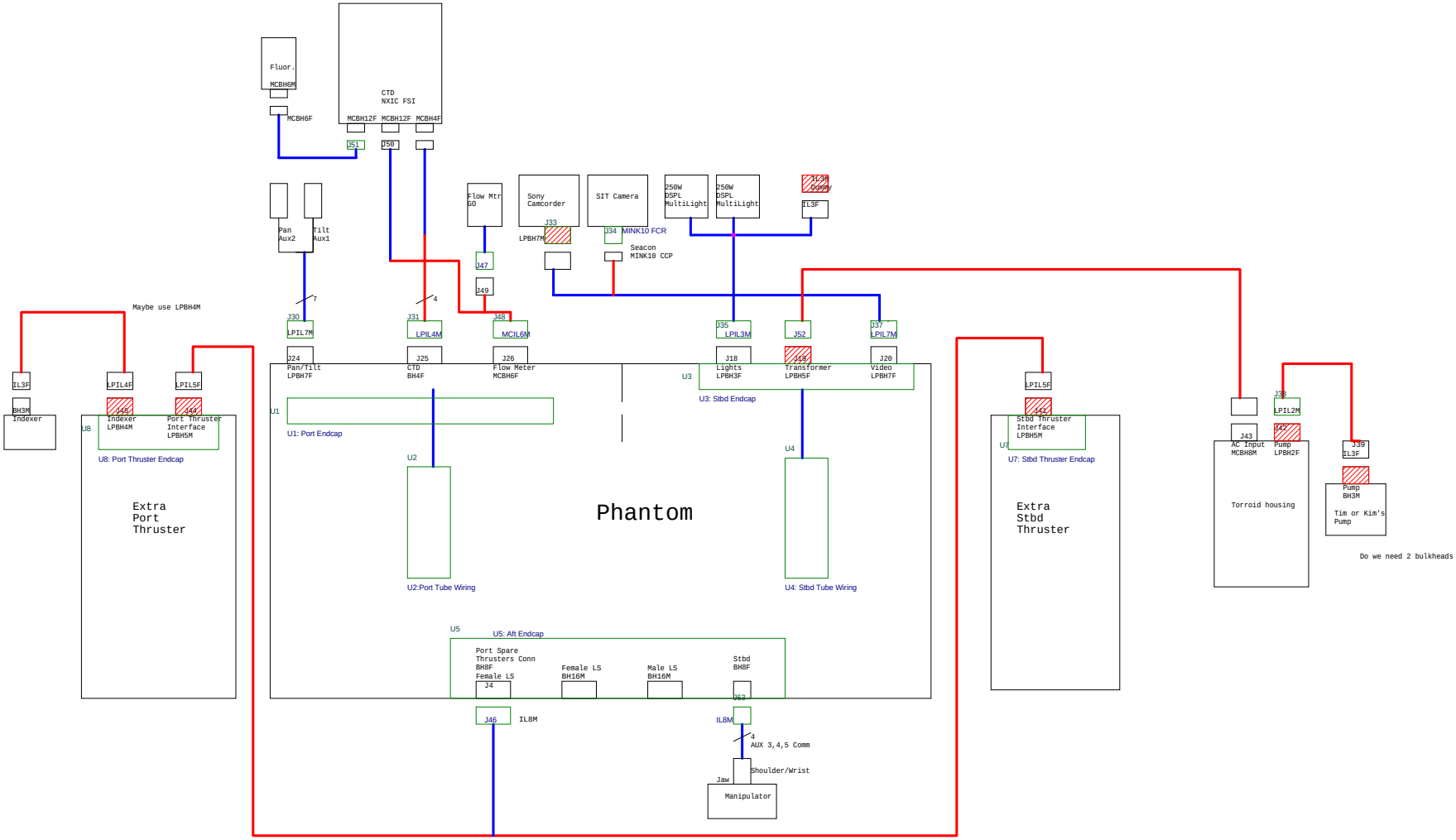

Connector Pin Outs:

Port Front Endcap
1. Pan/Tilt (LPBH7F) :(1) GND, Aux COM, Aux1, Aux2, +12V, Tilt Pos., (7) Pan Pos.
2. CTD (BH4F): (1) GND, TP2LO, +24V, (4)TP2HI
3. HD Cam Ctrl (BH4F): (1) GND, TP3LO, +12V, (4)TP3HI

Stbd Front Endcap
1. Lights (LPBH3F): (1) AC1, AC2,(3) GND
2. Not Used (LPBH4F):
3. Video (LPBH7F): (1) GND, Cam1HI, +12V, GND, Cam2HI, +18V, (7) CamCtrl

M B A R I	Monterey Bay Aquarium Research Institute 7700 Sandholt Road, Moss Landing, CA 95039			
	Title Phantom 2008: System			
Engineer Alana Sherman, x1780	Size C	Document Number <Rev>	Layout File <Layout File>	Rev <Rev>
Layout <Layout>	Date: Wednesday, February 06, 2008		Sheet 1 of 1	