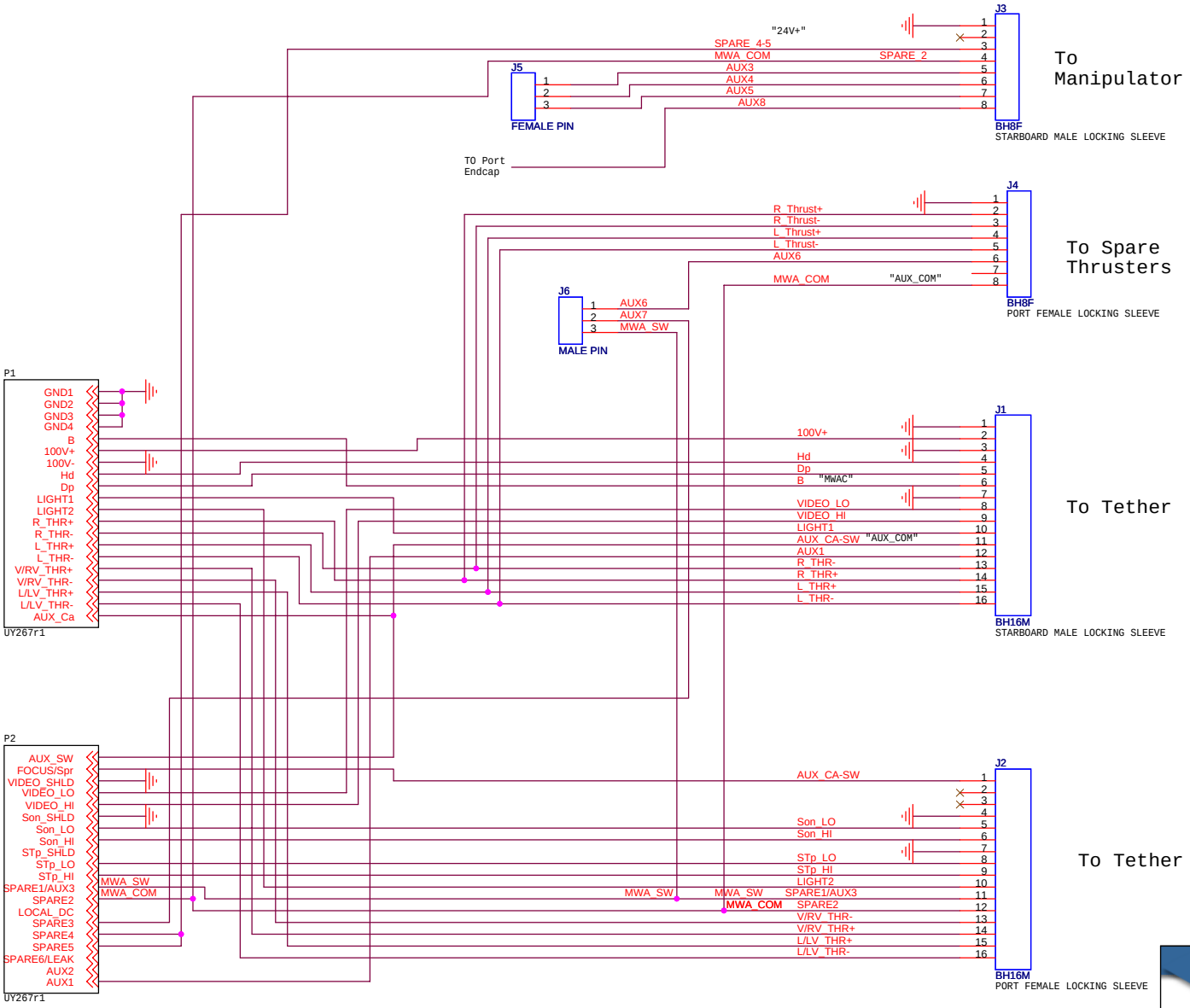

M B A R I	Monterey Bay Aquarium Research Institute 7700 Sandhold Road, Moss Landing, CA 95039		
	Title U5: Phantom Aft End Cap		
Engineer <Engineer>	Size B	Document Number <Doc>	Layout File <Layout File>	Rev <Rev>
Layout <Layout>	Date: Wednesday, March 19, 2008	Sheet 1 of 1		