REVISIONS				
ZONE	REV.	DESCRIPTION	DATE	APPROVED
	01	INITIAL DRAWING, RELEASE FOR FABRICTION	02-02-2008	WHA

NOTES: (UNLESS OTHERWISE SPECIFIED)

1. MATERIAL: DELRIN; COLOR BLACK
2. FINISH: NONE
3. INSTALL HARDWARE PER MANUFACTURERS INSTRUCTIONS
4. DATUM C PASSES THRU DATUM B
5. SURFACE FINISH 64 OR SMOOTHER

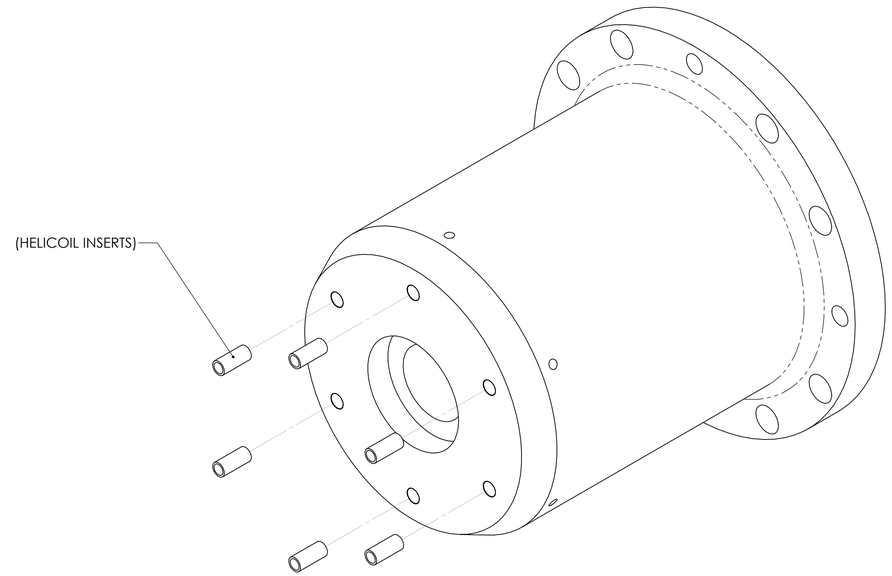

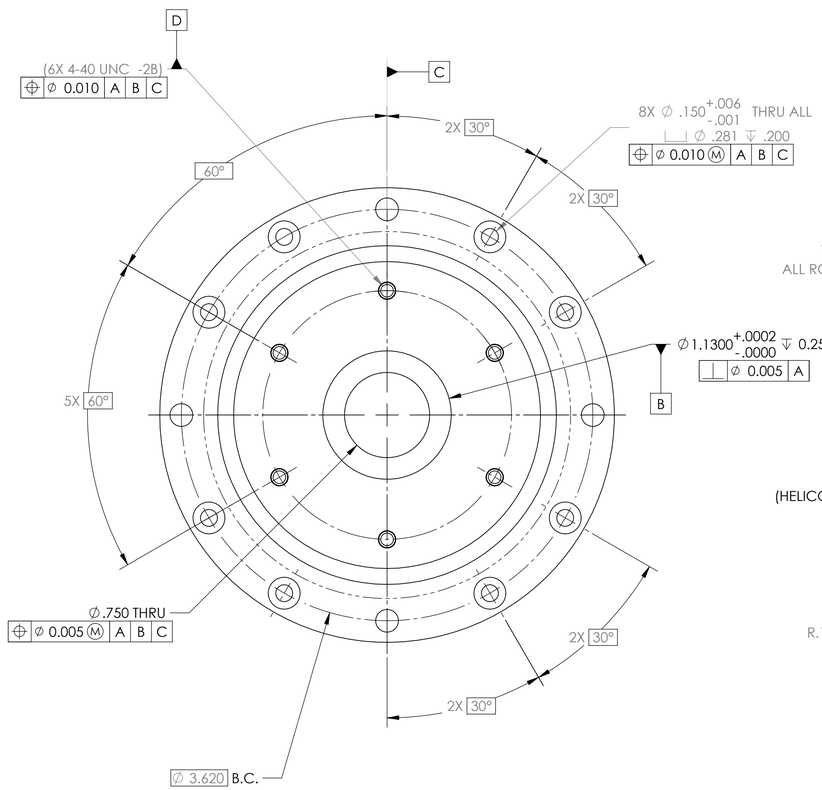

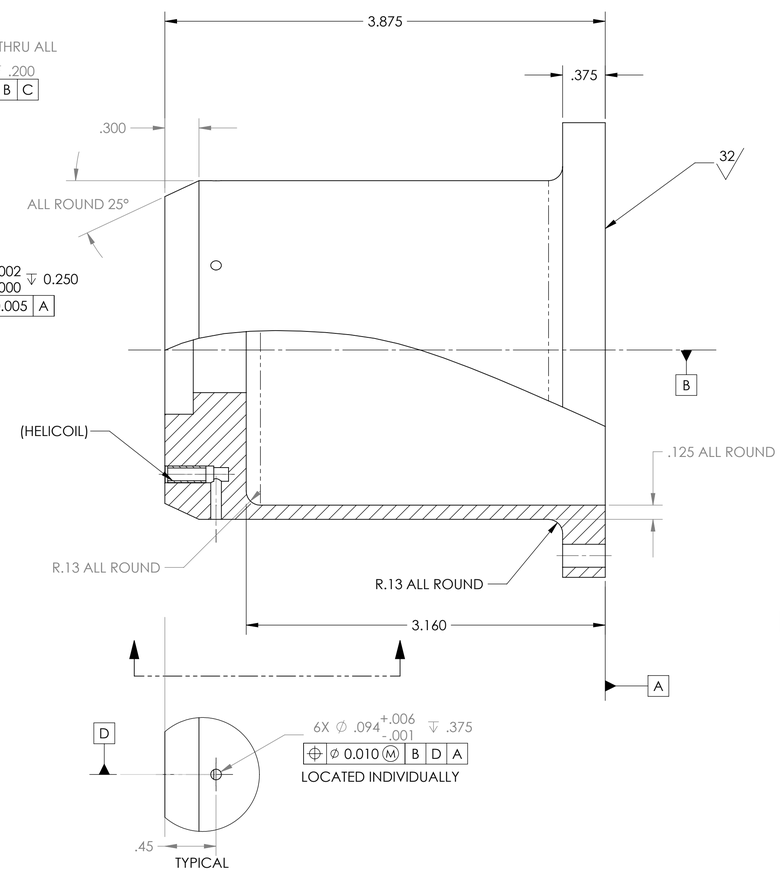

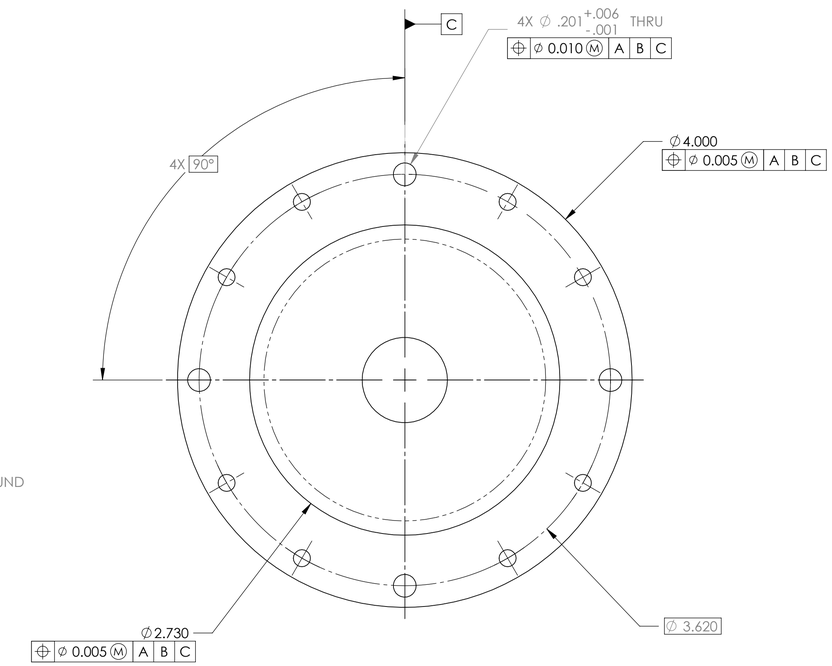

ITEM NO.	PART NUMBER	DESCRIPTION	QTY.
2	housing_propulsion_vpt-0016	PROPULSION HOUSING	1
1	1185-04CN336	HELICOIL, 4-40 X 0.336 L, SS	6

QUANTITY: 1

UNLESS OTHERWISE SPECIFIED:
DIMENSIONS ARE IN INCHES
TOLERANCES:
ANGULAR: ± 1.0°
LINEAR:
X.X ± 0.1
X.XX ± 0.03
X.XXX ± 0.010

INTERPRET DRAWING PER: ASME Y14.100-2004

MATERIAL: SEE NOTES

FINISH: SEE NOTES

DO NOT SCALE DRAWING

	NAME	DATE
DRAWN	W. ANDERSON	01-19-08
CHECKED		
ENG APPR.	W. ANDERSON	01-19-08
MFG APPR.		
Q.A.		

COMMENTS:
PROJECT NO: 900744.00

PROPRIETARY AND CONFIDENTIAL
THE INFORMATION CONTAINED IN THIS DRAWING IS THE SOLE PROPERTY OF SANTA CLARA UNIVERSITY. ANY REPRODUCTION IN PART OR AS A WHOLE WITHOUT THE WRITTEN PERMISSION OF SANTA CLARA UNIVERSITY IS PROHIBITED.

SANTA CLARA UNIVERSITY/MBARI

TITLE:
PROPULSION HOUSING

SIZE	DWG. NO.	REV
D	VPT-0016	01

SCALE: 1.5:1 WEIGHT: SHEET 1 OF 1