NOTES:

REV	DESCRIPTION	BY	DATE	ZONE
A	PRODUCTION RELEASE	T.O.	1/99	

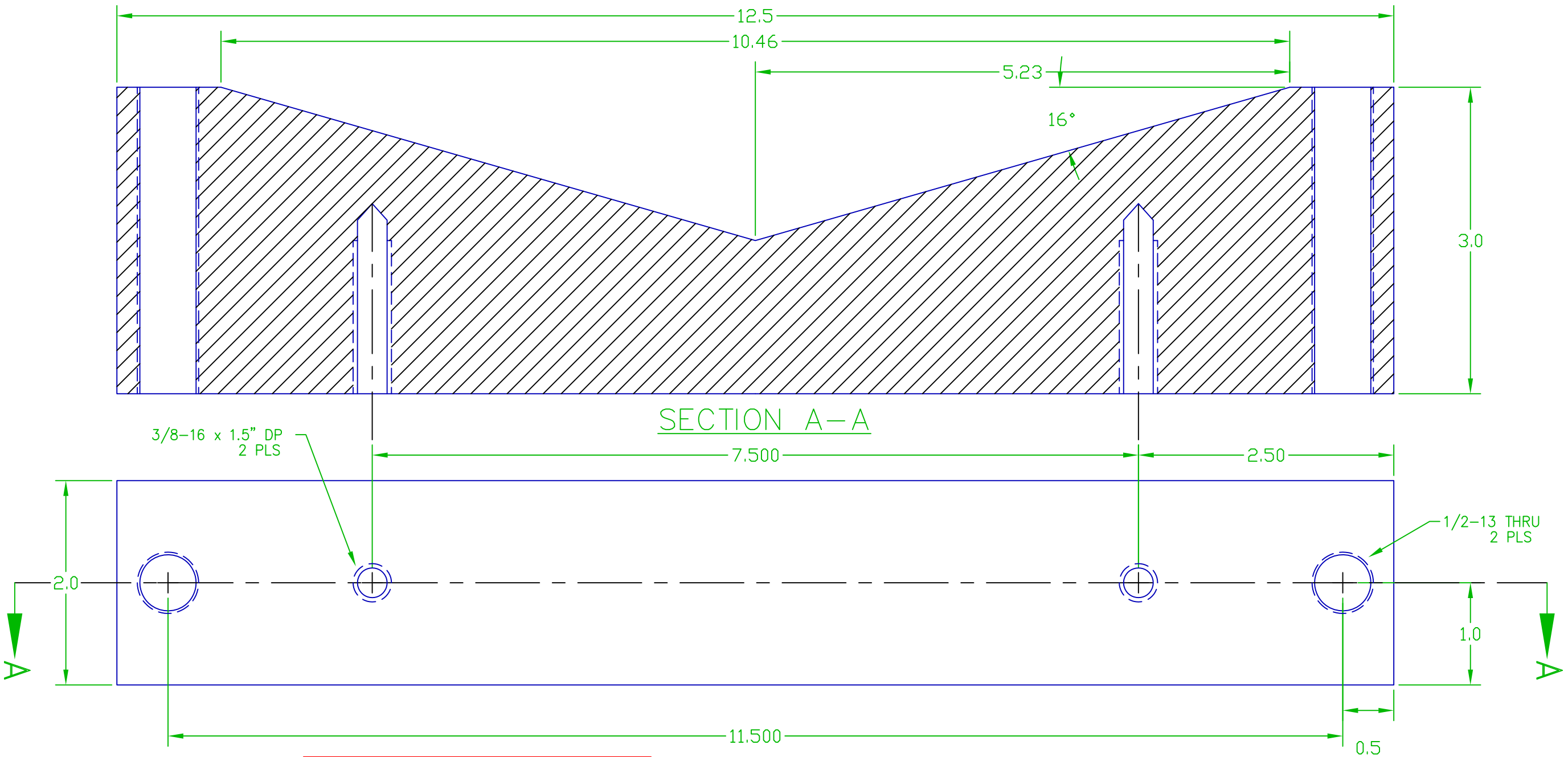

PROPRIETARY

THIS DOCUMENT AND THE SUBJECT MATTER CONTAINED HEREIN ARE PROPRIETARY. INSITE PACIFIC INC. RETAINS THE EXCLUSIVE RIGHT OF DISSEMINATION AND REPRODUCTION. THIS INFORMATION IS SUBMITTED IN CONFIDENCE FOR THE RECIPIENT ALONE.

INSITE PACIFIC Inc

SOLANA BEACH * CALIFORNIA * U.S.A. * TEL: 858-523-0642

UNLESS OTHERWISE SPECIFIED:

TOLERANCES:
.XX~ : ±.02
.XX : ±.01
.XXX : ±.005
HOLES : ±.003
ANGULAR : ±0.5°
FRACTIONAL : ±1/64

SURFACE FINISH 63
ALL DIMIENSIONS ARE IN INCHES (MM)
REMOVE ALL BURRS
BREAK ALL SHARP EDGES .02 – .03
DIMENSIONS APPLY BEFORE PLATING
DO NOT SCALE DRAWING

QTY PER	NEXT ASSEMBLY	USED ON
1	HCA–0100	HOUSING CLAMP

APPLICATION

MATERIAL	ALUMINUM
SPECIFICATION	2" PLATE
FINISH	STOCK
PLATING	NONE
ENG	T.O.
DRAW	M.SPEARMAN
CHECKED	
APPROVED	

HOUSING CLAMP
BASE / TOP

SIZE	DRAWING NO.	REV
B	HCA–0110	A

DATE	SCALE	SHEET	OF
2/99	1 = 1	1	1