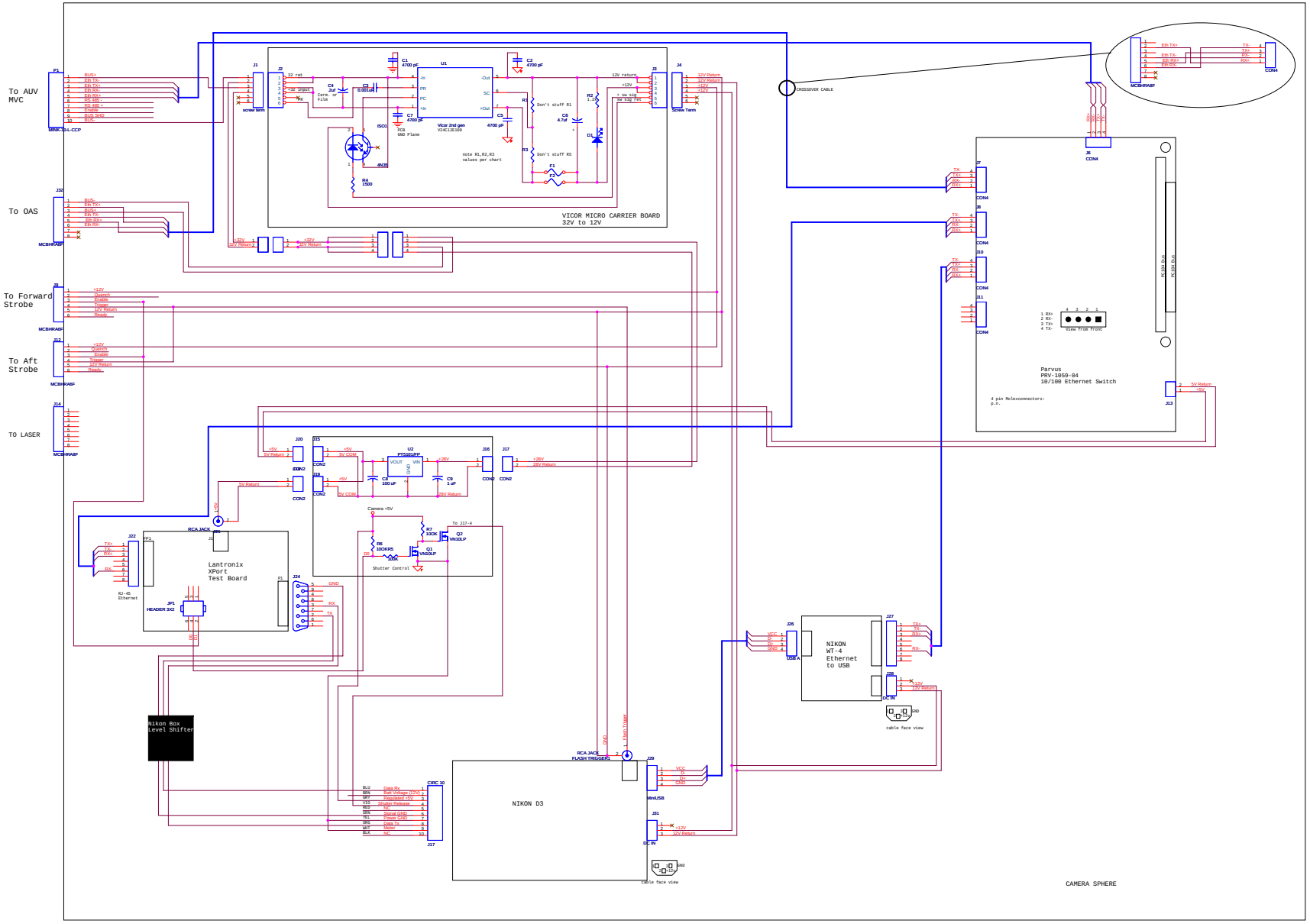

File	BIAUV: Camera Sphere
Size D	Document Number <Doc> Rev 1.0.0
Date: Thursday, December 18, 2003	Sheet 6 of 12