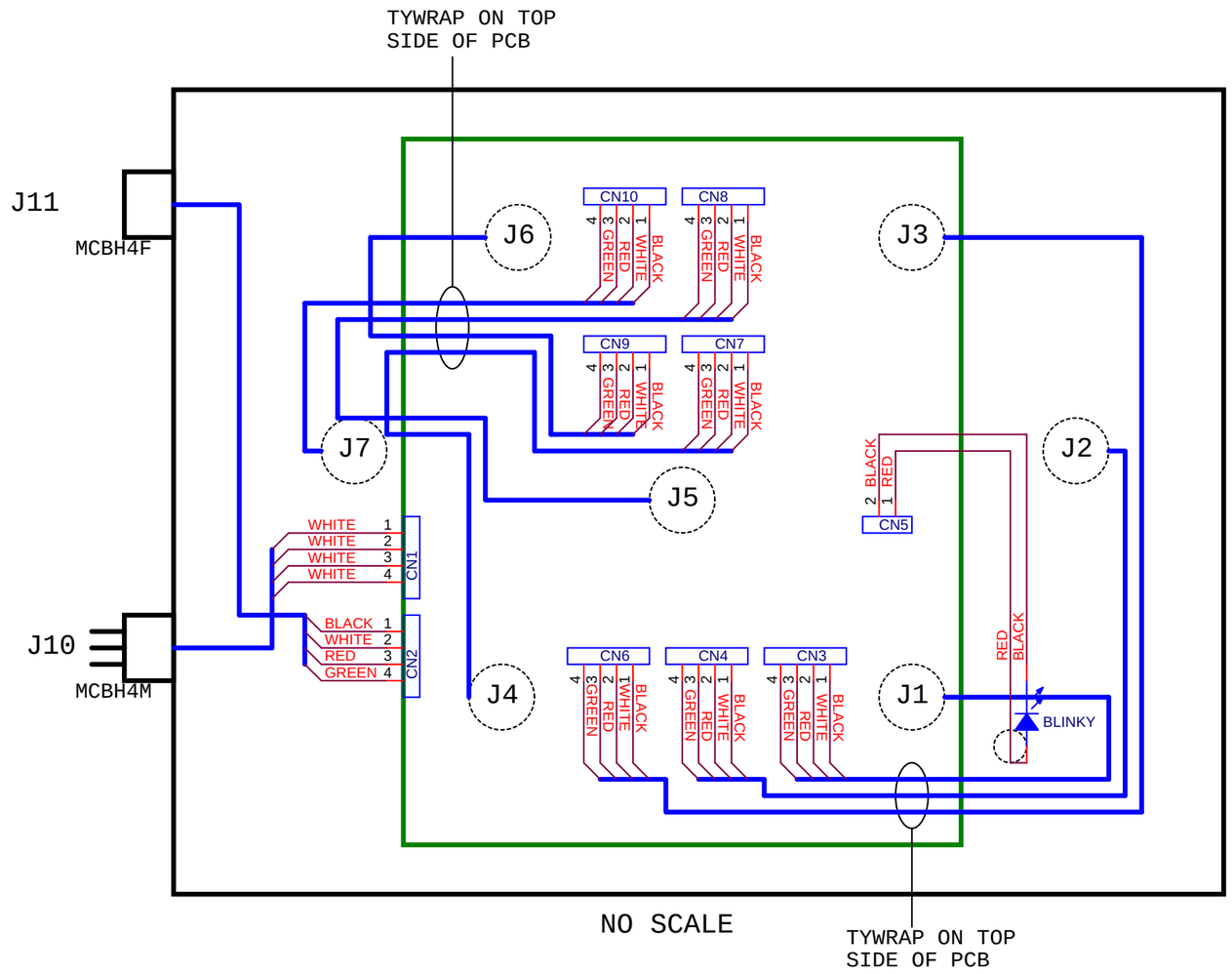

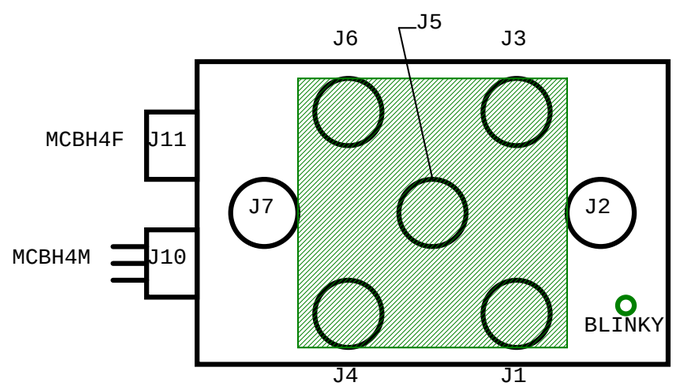

CONNECTOR LAYOUT
REAR VIEW

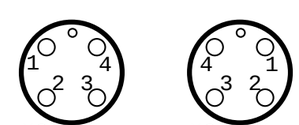

MCBH4F
FACE VIEW

MCBH4M
FACE VIEW

INITIAL RELEASE 6/12/09

Title	CHAMBER CONTROLLER INTERNAL WIRING LAYOUT	
Size B	Document Number <Doc>	Rev -
Date: Wednesday, October 06, 2010	Sheet 1 of 1	