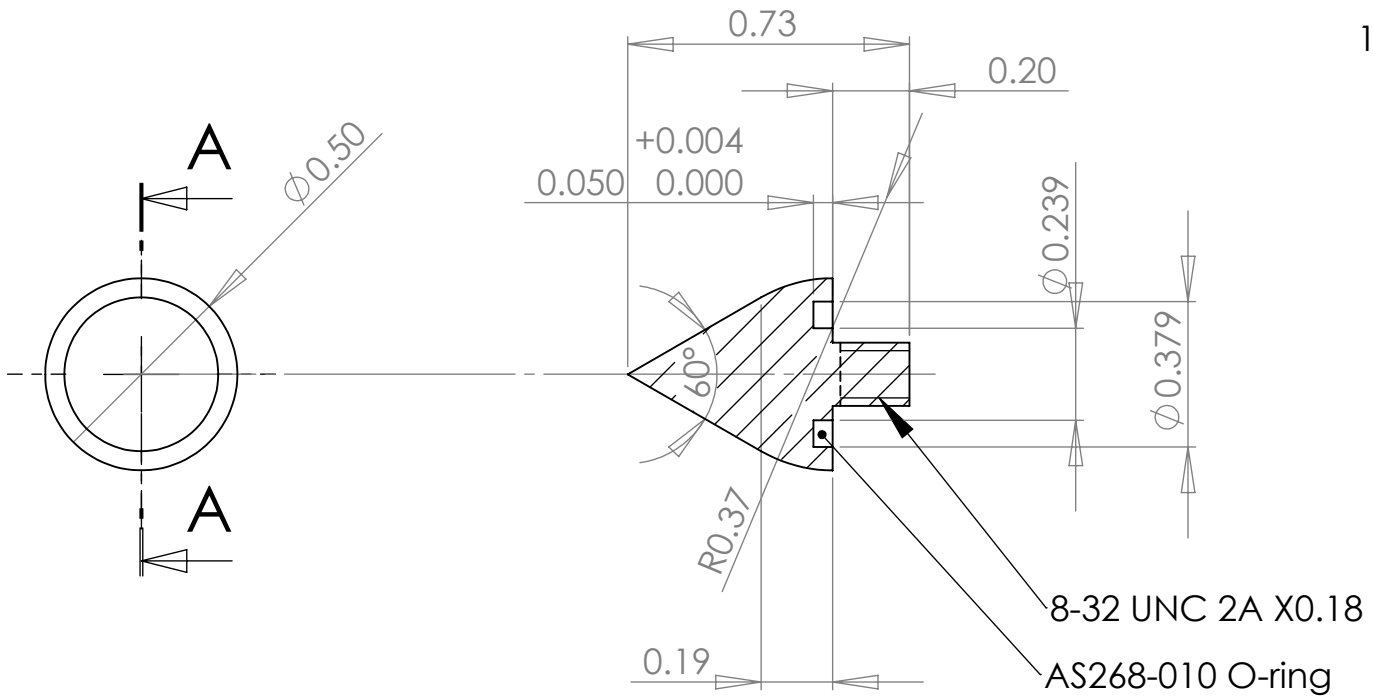

剖面 A-A

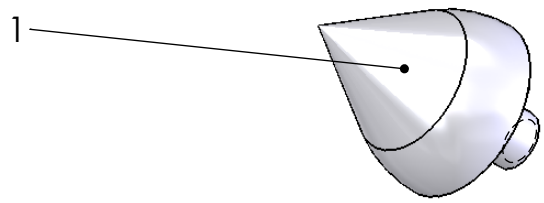

1	AL 6061-T6

UNLESS OTHERWISE SPECIFIED: DIMENSIONS ARE IN INCHES SURFACE FINISH: TOLERANCES: LINEAR: ANGULAR:	FINISH:		DEBUR AND BREAK SHARP EDGES	DO NOT SCALE DRAWING	REVISION	AS BUILT
	NAME	SIGNATURE	DATE	TITLE:		
DRAWN	XIN ZHANG		7/2009	PORE SAMPLER TIP		
CHK'D	J SCHOLFIELD		4/14/10			
APPV'D						
MFG						
Q.A			MATERIAL:	DWG NO.		A4
				10020502		
			WEIGHT:	SCALE:2:1	SHEET 1 OF 1	