THE INFORMATION CONTAINED IN THIS DRAWING IS THE SOLE PROPERTY OF MBARI ANY REPRODUCTION IN PART OR WHOLE WITHOUT THE WRITTEN PERMISSION OF MBARI IS PROHIBITED.

REVISIONS

REV.	DESCRIPTION	DATE	APPROVED
A	INITIAL RELEASE	08/10/15	MRC
B	CHANGED DESIGN TO SHEET METAL PART	08/11/15	MRC

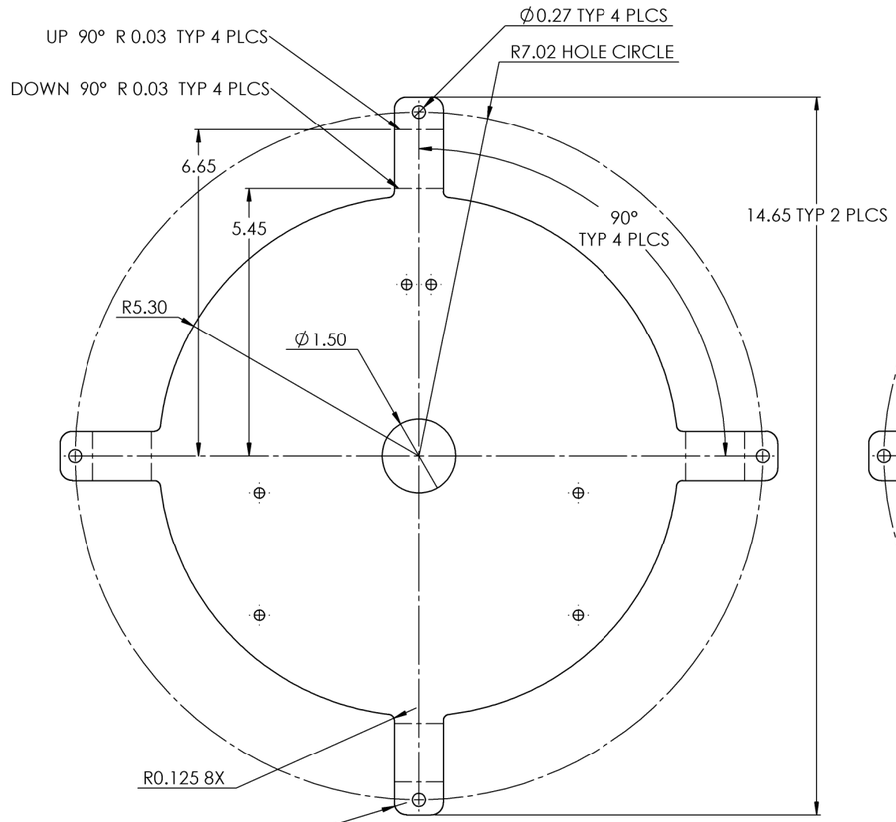

FLATTENED BASE DIMENSIONS

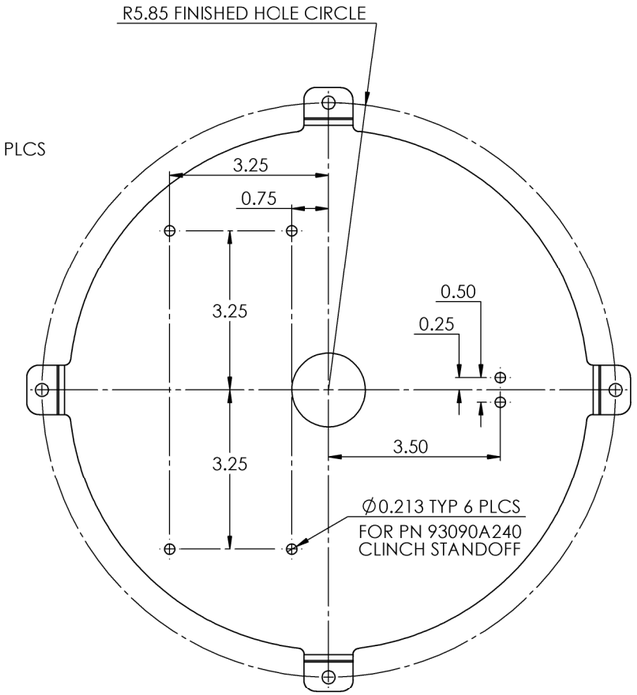

FINISHED PART DIMENSIONS

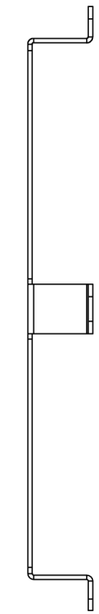

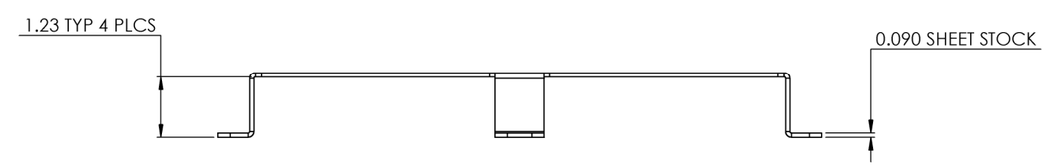

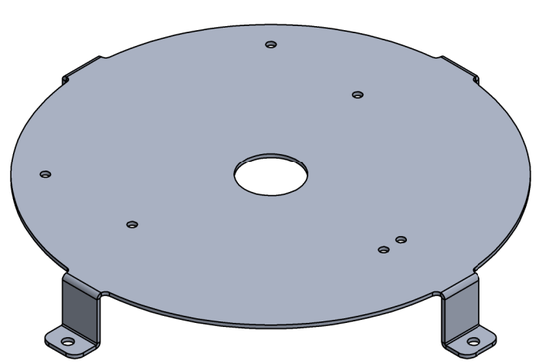

NOTES:

1. MATERIAL: 5052-H32 ALUMINUM SHEET 0.090 THICK
2. SOLID MODEL LOCATION:
ATLAS\\PROJECT LIBRARY\901023_NERC_MBARI_USGS_CanyonExperiment\EngineeringDesignDoc
\BIN_Design\BINMechanicalDesign\BINBatteryMechanicalDesign\BatterySphereInternalAssembly\11021186-04-B_BatteryMountUpperFrame.SLDPRT

BILL OF MATERIALS

Shop / Q.C.		UNLESS OTHERWISE SPECIFIED TOLERANCES ARE: 1 PLACE DIM ±0.1 2 PLACE DIM ±0.02 3 PLACE DIM ±0.01 ANGLE ±1°	APPROVALS DATE	Monterey Bay Aquarium Research Institute
Inspector		1. DIMENSIONS ARE IN INCHES. 2. DIMENSION LIMITS HELD AFTER PLATING.	DRAWN MRC 08/10/2015	MBARI 7700 Sandholdt Rd. Moss Landing, CA 95039 PH: (831) 775-1700
Shop Foreman		3. REMOVE BURRS AND SHARP EDGES (0.15 MAX) 4. MACHINED FILLET RADII (0.5-.030).	ENGINEER MARK CHAFFEY (831) 775-1708 chma@mbari.org	
Engineer		5. MACHINED DIAMETERS ON A COMMON CENTERLINE CONCENTRIC WITHIN .005 6. PERPENDICULARITY & PARALLELISM OF MACHINED SURFACES .002 PER INCH, MAX .012 INCHES FOR SINGLE SURFACE.	PROJECT No. 901023	CCE BATTERY MOUNT UPPER FRAME
NEXT ASSY Description	NEXT ASSY Number		PROJECT Name CORD. CYN. EXP.	SIZE C DWG. NO. 11021186-04-B-DWG REV. B
APPLICATION		DO NOT SCALE DRAWING	WEIGHT	SCALE CAD FILE: SHEET 1 OF 1