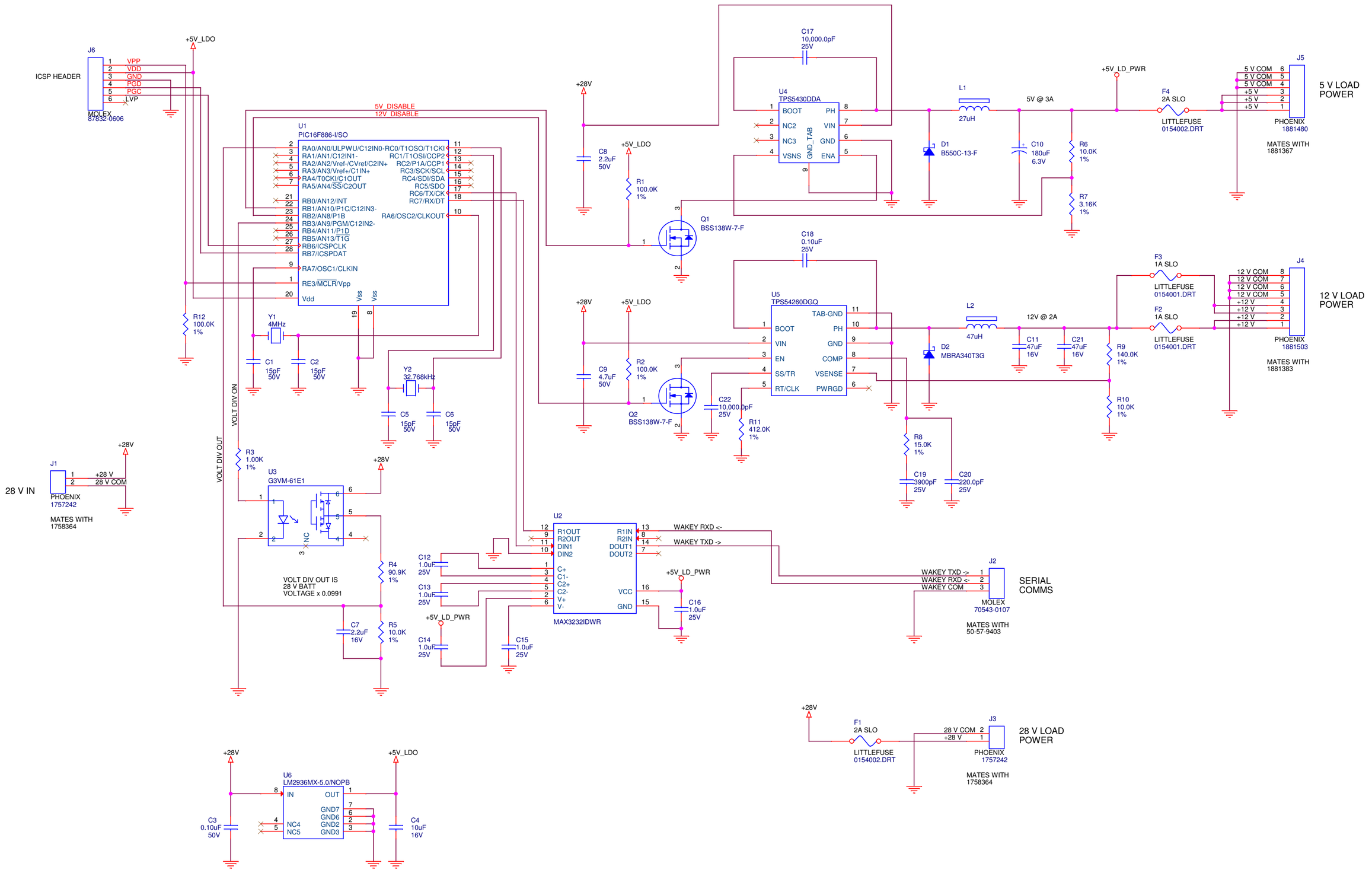

Monterey Bay Aquarium Research Institute 7700 Sandhold Road, Moss Landing, CA 95039			
Title Sedimentation Event Sensor: Wakey Board			
Engineer McGill	Size C	Document Number 10020813	Layout File <Layout File>	Rev 2.0.3
Layout <Layout>	Date: Monday, April 02, 2012		Sheet 1 of 1	