INSTRUCTIONS FOR THE OPERATION AND MAINTENANCE OF THE OCEAN IMAGING SYSTEMS REMOTE HEAD STROBE - MODEL 3831 TITANIUM HOUSING RATED FOR 6000 METERS

M-3831-026

April 17, 2012

Ocean Imaging Systems

A division of Marine Systems Technology, Inc.

Box 1407, North Falmouth, Massachusetts 02556 U.S.A.

Telephone: 1-508-548-0012

FAX: 1-508-548-8806

www.oceanimagingsystems.com

TABLE OF CONTENTS

1.0 INTRODUCTION 3

2.0 SPECIFICATIONS 3

2.1 UNDERWATER CONNECTORS 3

2.2 O-RINGS 4

3.0 INSTALLATION 4

3.1 INPUT POWER AND SYNC CONNECTIONS 4

3.2 ENERGY SELECTION 5

4.0 ELECTRONIC CIRCUITRY 7

5.0 MAINTENANCE 8

5.1 ELECTRONICS HOUSING MAINTENANCE 8

5.3 REMOTE FLASH HEAD MAINTENANCE 10

6.0 DRAWINGS 11

WARNINGS:

DANGER: VERY HIGH VOLTAGES
SERVICE BY PERSONEL TRAINED IN HIGH VOLTAGE EQUIPMENT ONLY !

CAUTION: DO NOT OPERATE ELECTRONICS WITHOUT CAPACITOR BANK ATTACHED . DAMAGE TO ELECTRONICS WILL OCCUR !!

TO PREVENT INJURY: FIRE STROBE IMMEDIATELY AFTER DICONNECTING POWER, AND ALLOW UNIT TO SIT OVERNIGHT TO DISCHARGE DANGEROUS VOLTAGES!

1.0 INTRODUCTION

The Ocean Imaging Systems Model 3831 strobe is a high-energy, high-repetition rate flash designed for rigorous oceanographic imaging applications. The system consists of an electronics bottle containing the energy storage capacitors and supporting electronics, and two remote flash heads. This special strobe has an extra transformer (T1) installed, as well as other changes to reduce the recycle time. This unit also has a energy selection feature installed. The power selection process is described in the installation section of the manual. In addition, the remote flash heads have been modified to bring the trigger wire directly to the flashtube, bypassing the flash tube socket. This change was made to mitigate the effects of condensation that may form inside the flash head after extended operation.

2.0 SPECIFICATIONS

Depth Rating:	6000 meters
Input Voltage:	24 VDC nominal (23 to 33 vdc)
Input Current:	Up to 8.6 Amps during recharge (@24 vdc)
Strobe Energy	50/100/200 joules
Recycle Time:	0.5Sec/1.0Sec/2.0Sec
Dimensions:	
Electronics Bottle:	5" Dia x 14" long (excluding connectors)
	5" Dia. x 17" long including mounting brackets
Flash Head:	3.35" Dia x 9-1/4" long
	8.25" Dia Reflector
Weights:	
Electronics Bottle (air):	23.2 Lbs (10.5 Kg)
Electronics Bottle (water):	14.7 Lbs (6.7 Kg)
Flash Head (air):	2.5 Lbs (1.14 Kg)
Flash Head (water):	2 Lbs (0.9 Kg)

2.1 UNDERWATER CONNECTORS

Electronics housing power/sync bulkhead:	Impulse BH-5-MP SS + DLSA-M
Electronics housing power/sync mate:	Impulse IL-5-FS + DLSA-F
Electronics housing remote head bulkhead:	(2x) Impulse BH-4-FS SS + DLSA-F
Electronics housing remote head mate :	(2x) Impulse IL-4-MP + DLSA-M
Remote head bulkhead:	Impulse LPBH-4-MP SS w/ ½" thread
Remote head mate:	Impulse LPIL-4-FS

2.2 O-RINGS

Electronic housing end cap O-Rings:	#2-240 (2x)
Remote Head O-Rings:	#2-225 (2x)

3.0 INSTALLATION

CAUTION: HIGH VOLTAGES PRESENT. EXERCISE EXTREME CAUTION

Mount the electronics bottle by the fiberglass mounting brackets. Connect the remote flash head(s) to the bottle exercising care, as high voltages may be present on the remote head connector..

The remote flash head may be mounted by the four ¼-28 taped holes around the base, by means of the screws on the back (connector) side of the endcap, or by means of the fiberglass bracket supplied.

Figure 3.1 Remote Flash (reflector and mounting bracket removed)

3.1 INPUT POWER AND SYNC CONNECTIONS

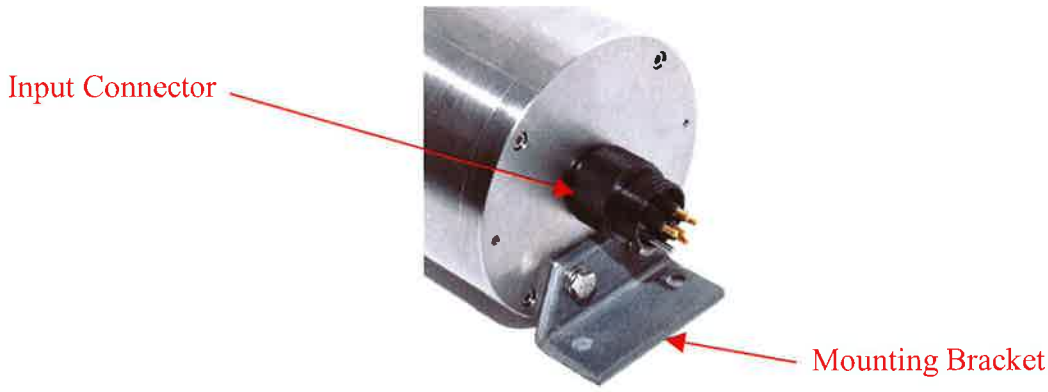

Figure 3.2 Housing – View of Input Connector

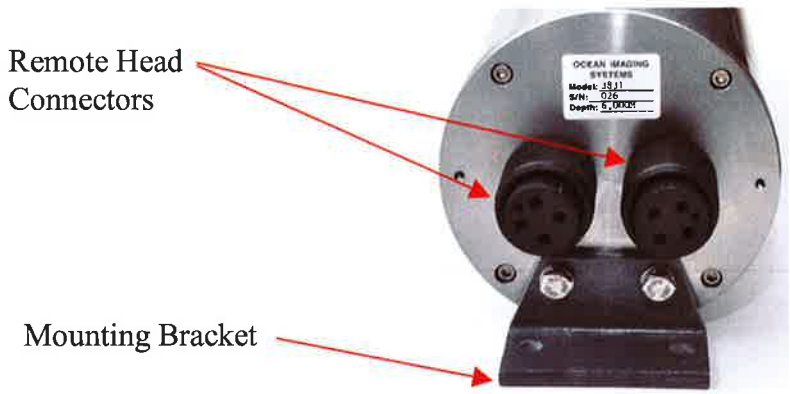

Figure 3.3 Housing – View of Remote Head Connectors

Connection to the strobe is made by means of the single Impulse BH-5-MP bulkhead connector. Pin assignments are:

Pin 1	Input power return (**C**ommon)
Pin 2	+ 24 vdc input power (**B**attery)
Pin 3	Control input (**P**rogram)
Pin 4	Sync (**S**ync)
Pin 5	Quench (**Q**uench) - Optional

The control line (P) is used to enable and disable the strobe. To continuously enable the strobe, it can be connected to the incoming power, or it can be switched on and off via remote control if required. The sync line (S) is a negative going signal that causes the flash to fire, while the quench (Q) line is also negative going and is used by auto-exposure systems to truncate the flash when it has been determined by the camera that it has received enough light. Both these lines are pulled up to +5V in the strobe and thus may be activated by an open collector driver or switch.

3.2 ENERGY SELECTION

The strobe may be configured to operate at three different energy levels. The recycle time of the strobe is proportional to the energy level selected. See chart below:

ENERGY LEVEL (Joules)	RECYCLE TIME (Seconds)
50 Joules	0.5 Seconds
100 Joules	1.0 Seconds
200 joules	2.0 Seconds

Figure 3.4 Output Energy Options

To select the flash output energy level, follow the procedure below.

DANGER: VERY HIGH VOLTAGES

SERVICE BY PERSONEL TRAINED IN HIGH VOLTAGE EQUIPMENT ONLY !

1) Open the housing as outlined in section 5.1

2) The interlock switch should discharge the high voltage capacitors. However, before proceeding, verify that the capacitors have been fully discharged.

CAREFULLY measure the voltage between terminals 1 and 3, and then 2 and 4 on the energy selection board. If these voltages are above 5vdc, allow the unit to sit. There are bleed resistors on the "energy selection board" that will slowly discharge any voltage present (note that regardless of the actual shunt positions, always measure the terminals as described).

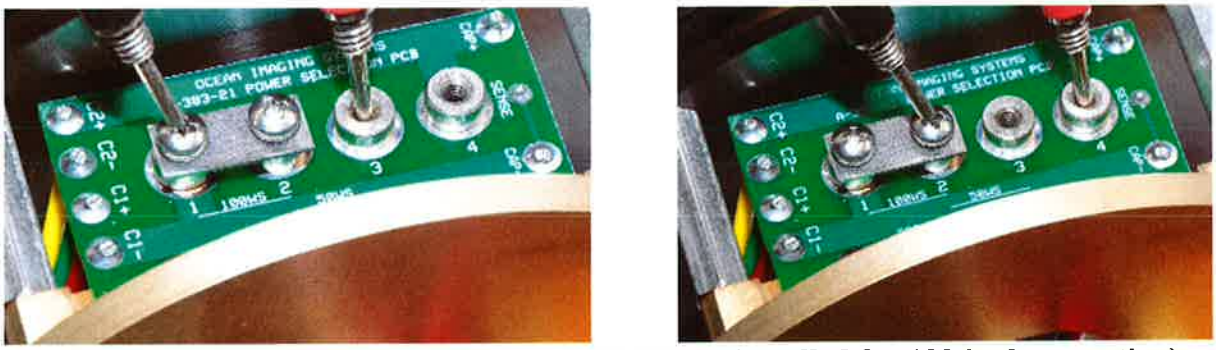

Figure 3.5 Measuring Capacitor Voltage (shunt installed for 100 joule operation)

3) Proper procedure for installing and removing shunts

CAUTION: When installing and removing shunts, be sure to partially loosen both screws. **Do NOT** remove one screw completely, and then try and loosen the other screw. If one screw is tightened or untightened without having the other screw in place, excess torque will be applied to the threaded standoff, which can brake the solder joint.

Both screws loosened.

Figure 3.6 When removing shunts, loosen both screws before removing either completely When installing shunts, install both screws partially before tightening.

One screw removed.

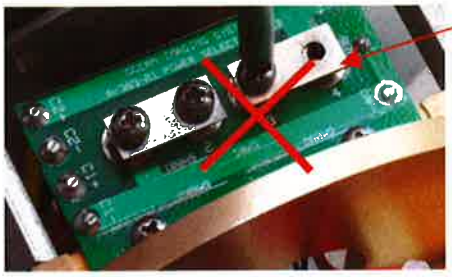

Figure 3.7 DO NOT remove one screw completely, before loosening both.

4) Installing shunts to yield desired energy level.

CAUTION: Never operate strobe without having shunts installed in a valid configuration. Damage to the strobe electronics will result.

50 Joules **100 Joules** **200 Joules**

Figure 3.8 Shunt locations for various energy levels.

Install shunts in one of the three configurations shown above. Be sure to install both screws in each shunt, and lightly tighten. Only when both screws are installed should either screw be fully tightened. Alternate between screws when tightening.

4.0 ELECTRONIC CIRCUITRY

All the flash electronic circuitry is contained on the flash board within the electronics housing. Repair at the component level is NOT recommended. Repair of the electronics is limited to the replacement of the electronic PC Board (or energy storage capacitors). The PC board schematic is included for informational purposes only.

DANGER: VERY HIGH VOLTAGES

SERVICE BY PERSONEL TRAINED IN HIGH VOLTAGE EQUIPMENT ONLY !

Before working on unit, make certain that the capacitor bank is fully discharged. Measure voltages per section 3.2 paragraph 2 above.

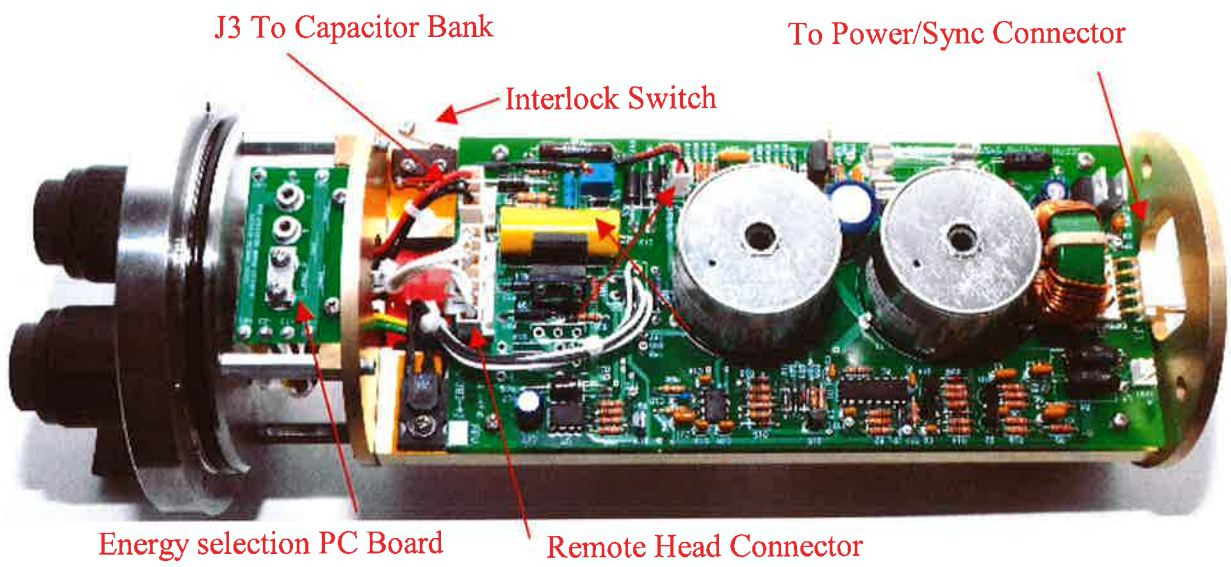

Figure 4.1 Electronics PC Boards and Wiring

CAUTION:

Operation of the electronics with the capacitor bank disconnected WILL cause damage to the electronics! Make sure J3 is installed and shunt(s) are in place.

5.0 MAINTENANCE

The electronics and capacitor bank do not require maintenance and should provide long- term reliable service without any attention. Repair of the electronics should be limited to replacement of the PC board and capacitors. For board level repairs, return the faulty board to the factory.

5.1 ELECTRONICS HOUSING MAINTENANCE

Should it necessary to open the electronics housing follow the procedure below.

Remove the 4 screws that retain the end cap containing the power connector. (You must remove this end cap FIRST!) Insert **plastic** #8-32 screws into the two "jacking screw" holes, and gently screw them in to extract the end cap. Be sure to remove this end cap first! See figure 5.1 below.

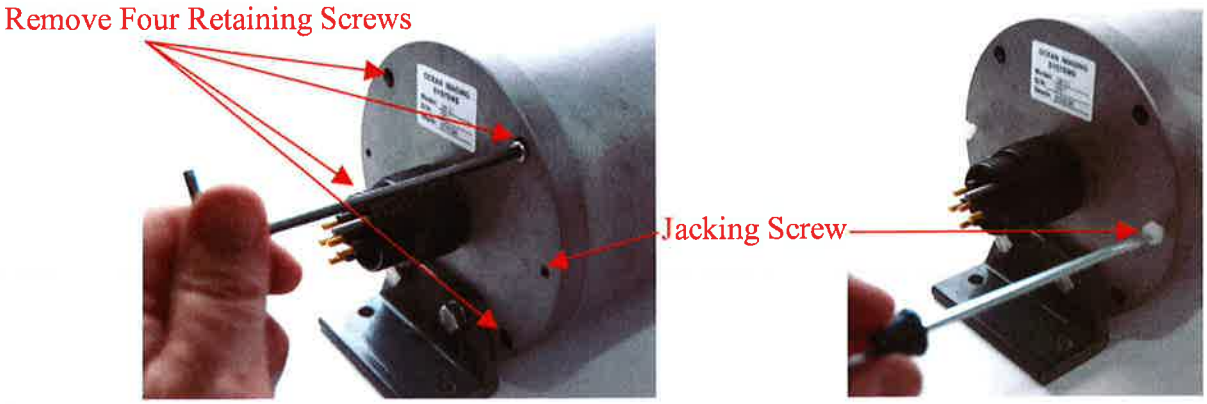

Figure 5.1 Opening Pressure Housing

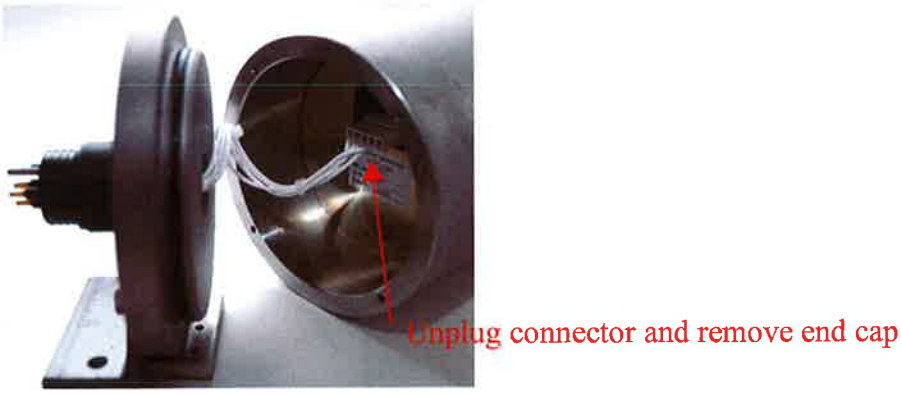

Figure 5.2 End cap Removal

Remove the other end cap, following the same procedure outlined above. The chassis will now slide out, connected to the remote head connector end cap.

Figure 5.3 Chassis Assembly Shown With Housing Removed

Re-assembly is performed by reversing the dis-assembly procedure.

5.3 REMOTE FLASH HEAD MAINTENANCE

The only maintenance that should be required for the remote head is the replacement of the flashtube. To replace the flashtube (after removing the reflector) remove the four dome retaining screws as shown in 5.4 below. Relieve the pressure of the four bolts evenly, moving from one to the next.

Figure 5.4 Flash Head Retaining Bolt Removal

Remove the dome, exercising care to avoid chipping the glass. Remove the flashtube retaining screw, and unsolder the red trigger lead. Extract the flashtube from the socket. See figure 5.5 below.

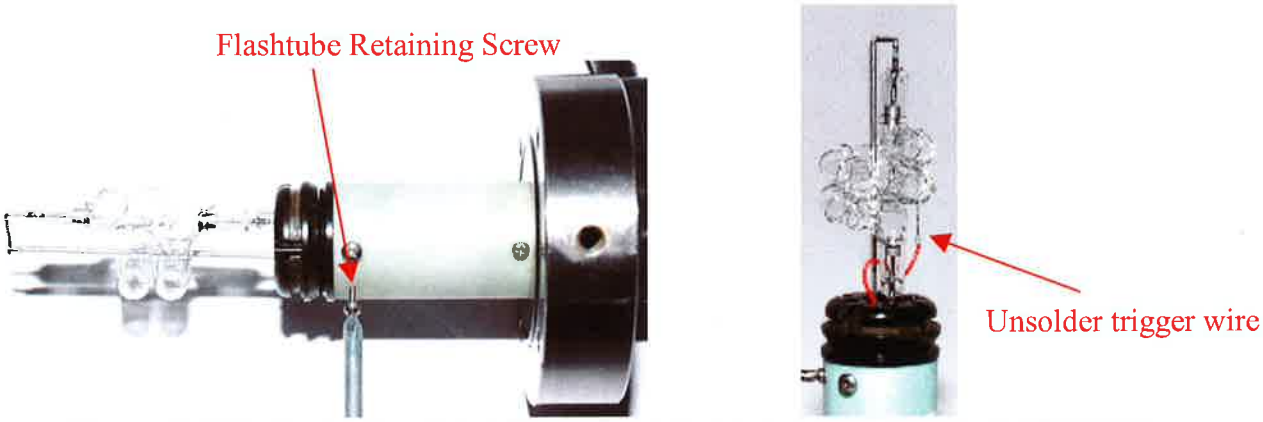

Figure 5.5 Flashtube Retaining Screw Removal and Trigger Wire De-Soldering

Install a new flashtube, p/n A-386-22 (note that the pin 1 of the flashtube must have a .093 drill thru it to allow for the retaining screw), and install the #2 retaining screw. Re-solder the trigger lead. Carefully clean the tube with alcohol to removal all fingerprints and grease that would cause reduced tube life. Clean the end cap surface, o-ring (DO NOT GREASE this O-ring) and dome, and re-install the dome retainer. Tighten the four screws evenly until the split lock washers are fully compressed. Make sure that the retainer is level. When tightening the screws, be sure to do it evenly, alternating from one screw to the next.

NOTE: It is recommend to close the flash head in a dry nitrogen environment. This can be done using a "glove bag" available at Cole Parmer (http://www.coleparmer.com, p/n WU-04408-30) and a tank of pure (dry) nitrogen with regulator. This procedure is particularly recommended for severe applications with high repetition rates.

Figure 5.6 Remote Flash Head with Reflector Installed

6.0 DRAWINGS

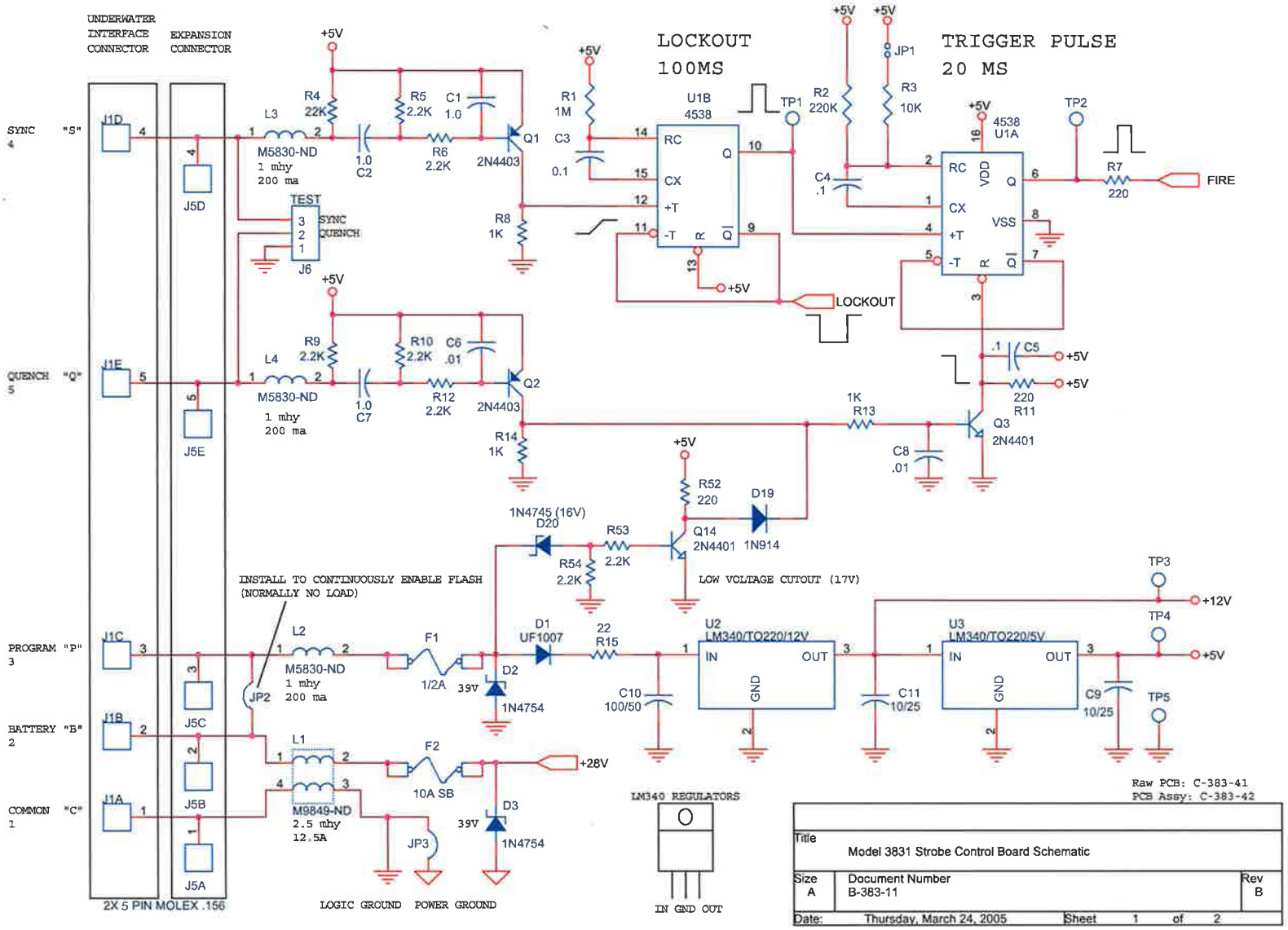

Figure 6.1 Schematic - Interface Section

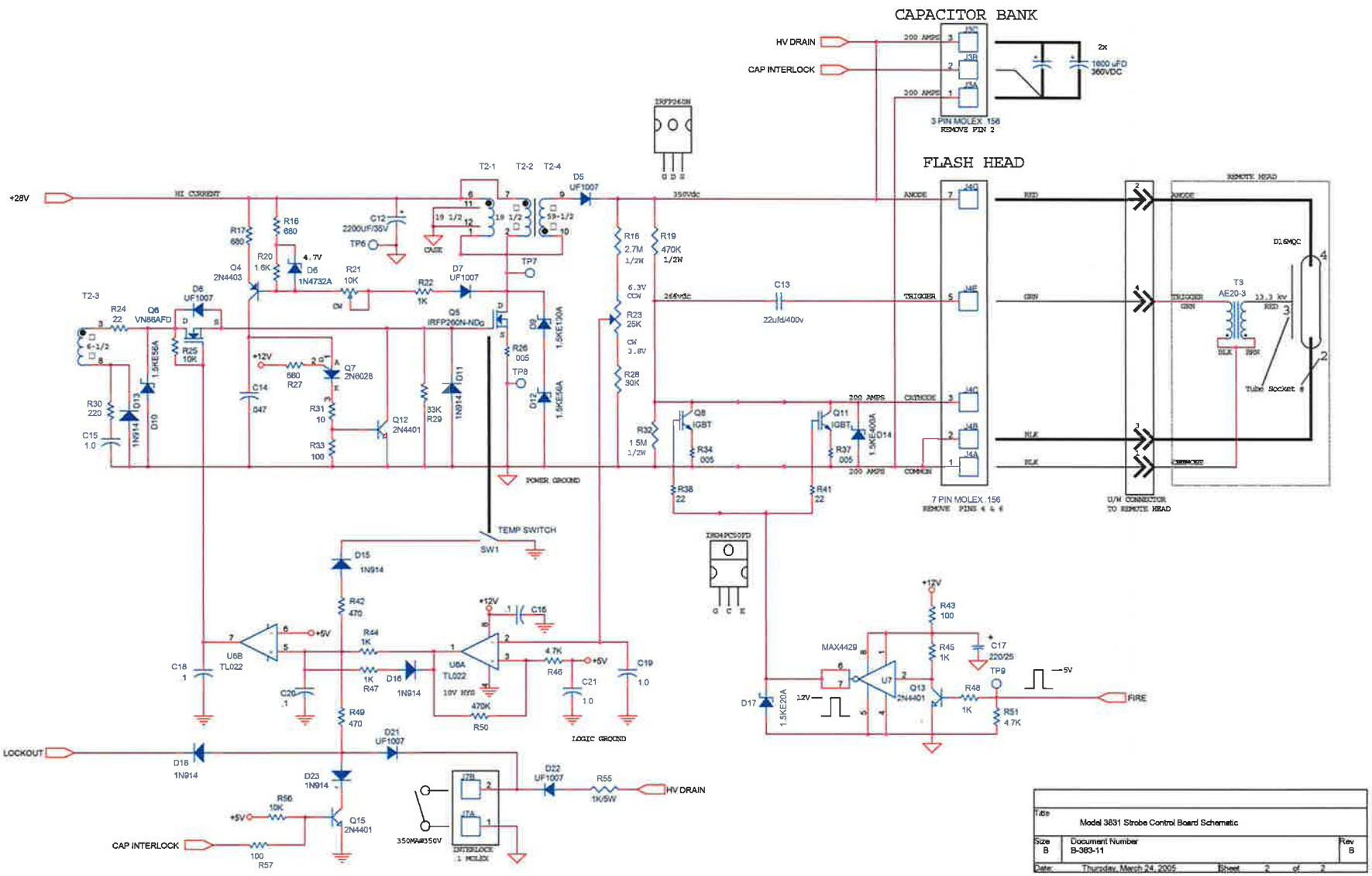

Figure 6.2 Schematic - Power Section