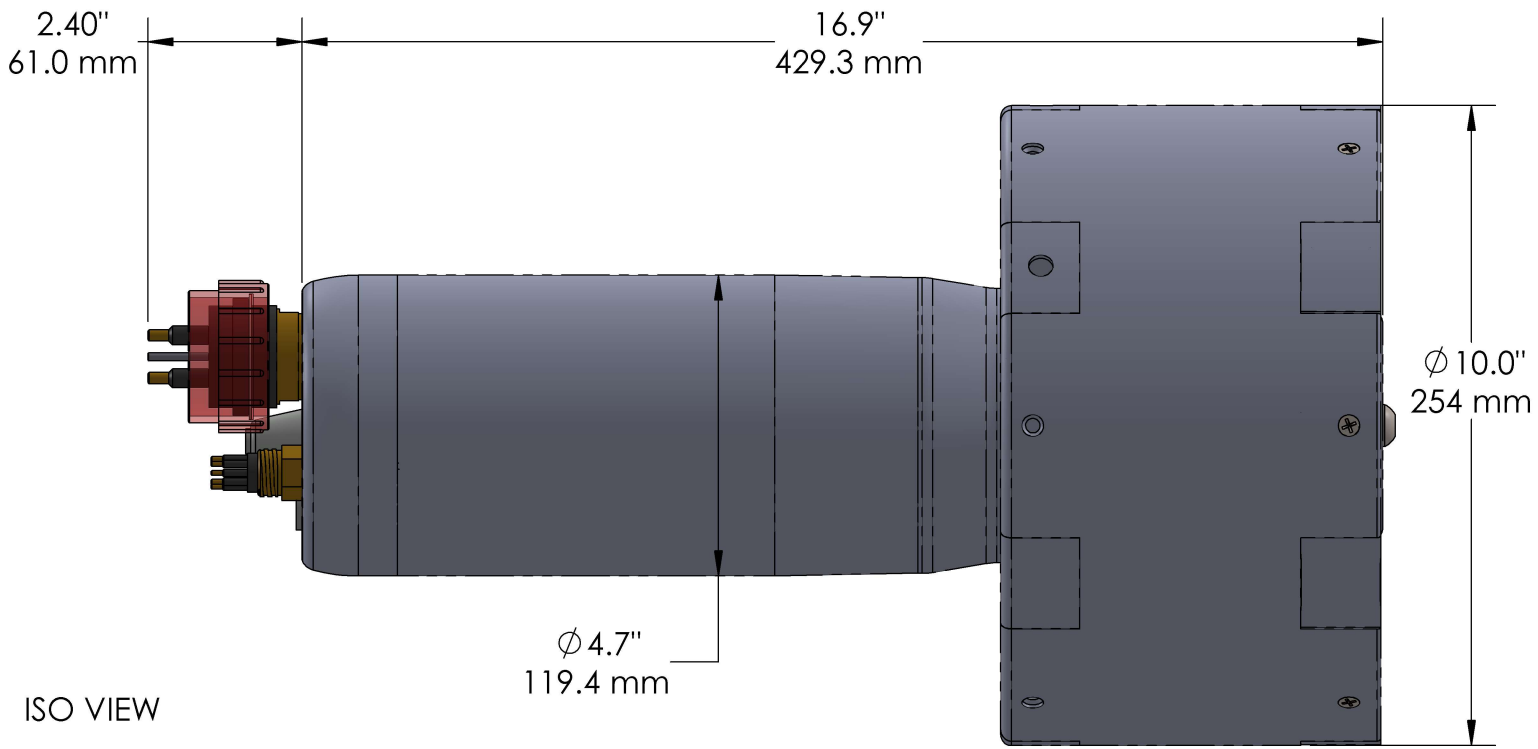

ISO VIEW

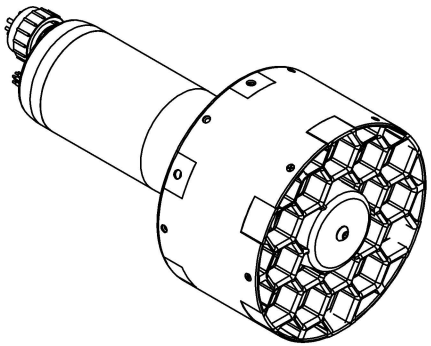

PART #	PART DESC.	DRY WEIGHT	WET WEIGHT
H106-12300RH10	ELECTRIC HEXSCREEN THRUSTER	35 LBS	25 LBS

PROPRIETARY AND CONFIDENTIAL

THE INFORMATION CONTAINED IN THIS DRAWING IS THE SOLE PROPERTY OF INNERSPACE CORPORATION. ANY REPRODUCTION IN PART OR AS A WHOLE WITHOUT THE WRITTEN PERMISSION OF INNERSPACE CORPORATION IS PROHIBITED.

INNERSPACE CORPORATION

TITLE:
H106-12300RH10 ELECTRIC HEXSCREEN THRUSTER DIMENSIONS

SIZE	DWG. NO.	REV
A	H106-12300RH10-DIM	1

SCALE: 1:3 | WEIGHT: 35/25 | SHEET 1 OF 2

TYPICAL THRUSTER MOUNTING HARDWARE
3/8-24SS COUNTERSUNK BOLTS



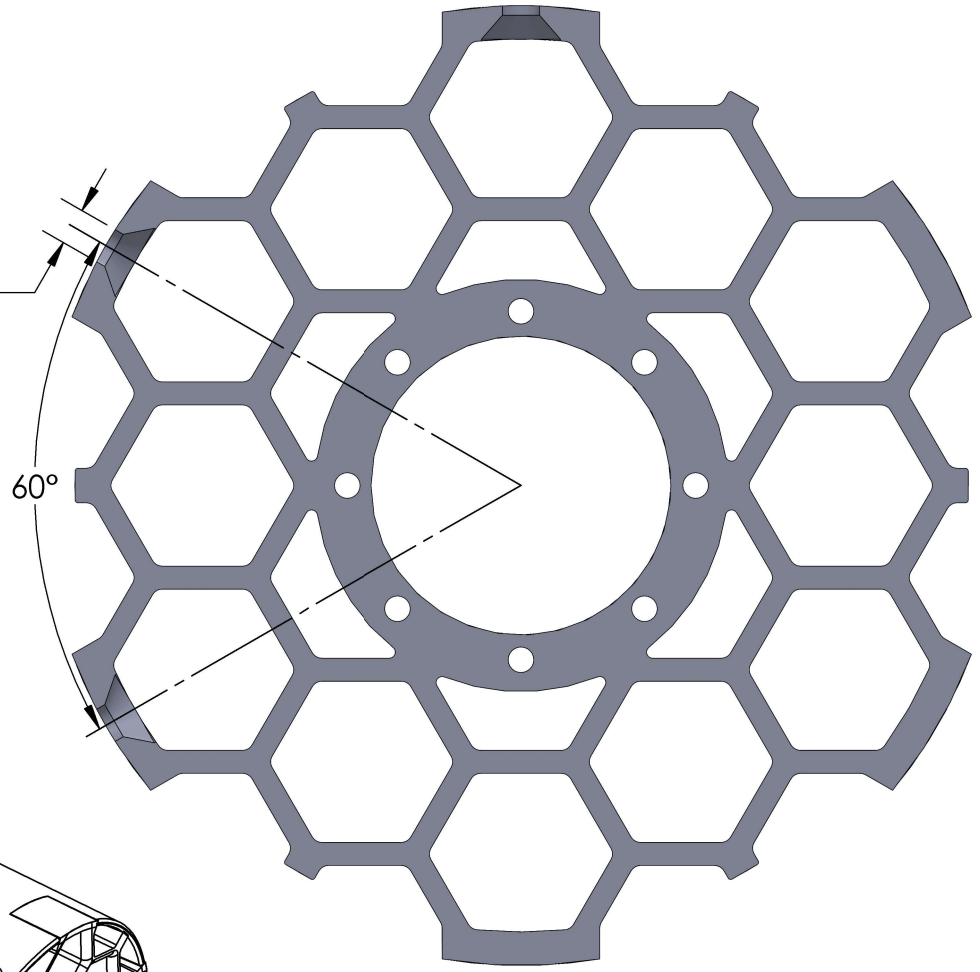

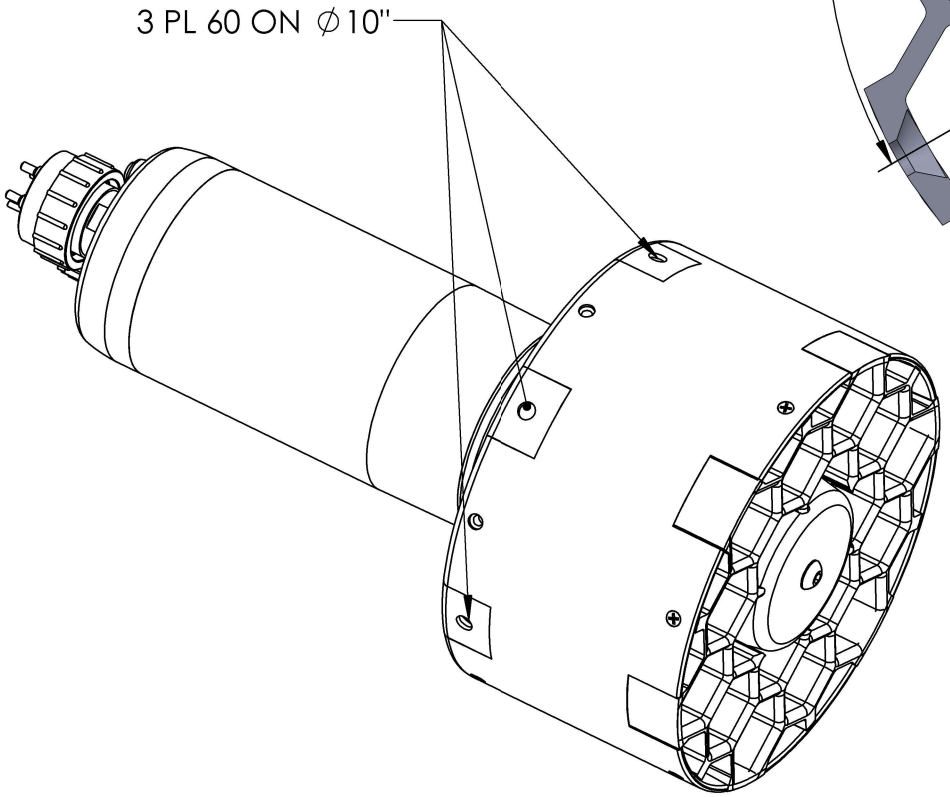

PROPRIETARY AND CONFIDENTIAL

THE INFORMATION CONTAINED IN THIS DRAWING IS THE SOLE PROPERTY OF INNERSPACE CORPORATION. ANY REPRODUCTION IN PART OR AS A WHOLE WITHOUT THE WRITTEN PERMISSION OF INNERSPACE CORPORATION IS PROHIBITED.

INNERSPACE CORPORATION

TITLE:
H106-12300RH10
ELECTRIC HEXSCREEN
THRUSTER DIMENSIONS

SIZE	DWG. NO.	REV
A	H106-12300RH10-DIM	1

SCALE: 1:3	WEIGHT: 35/25	SHEET 2 OF 2