THE INFORMATION CONTAINED IN THIS DRAWING IS THE SOLE PROPERTY OF MBARI ANY REPRODUCTION IN PART OR WHOLE WITHOUT THE WRITTEN PERMISSION OF MBARI IS PROHIBITED.

REVISIONS			
REV.	DESCRIPTION	DATE	APPROVED
2	Changed Radius, Thickness and Diameter	10/12	BH

RADIUS	RAD TOL	IRR TOL	C.A. DIA
22.778 CX	5 RINGS	2 FRINGES	
55.08 CC	5 RINGS	2 FRINGES	

EDGE DIA	MATERIAL	THICK	THI TOL
40.000	S-FPL53	12.55	.1

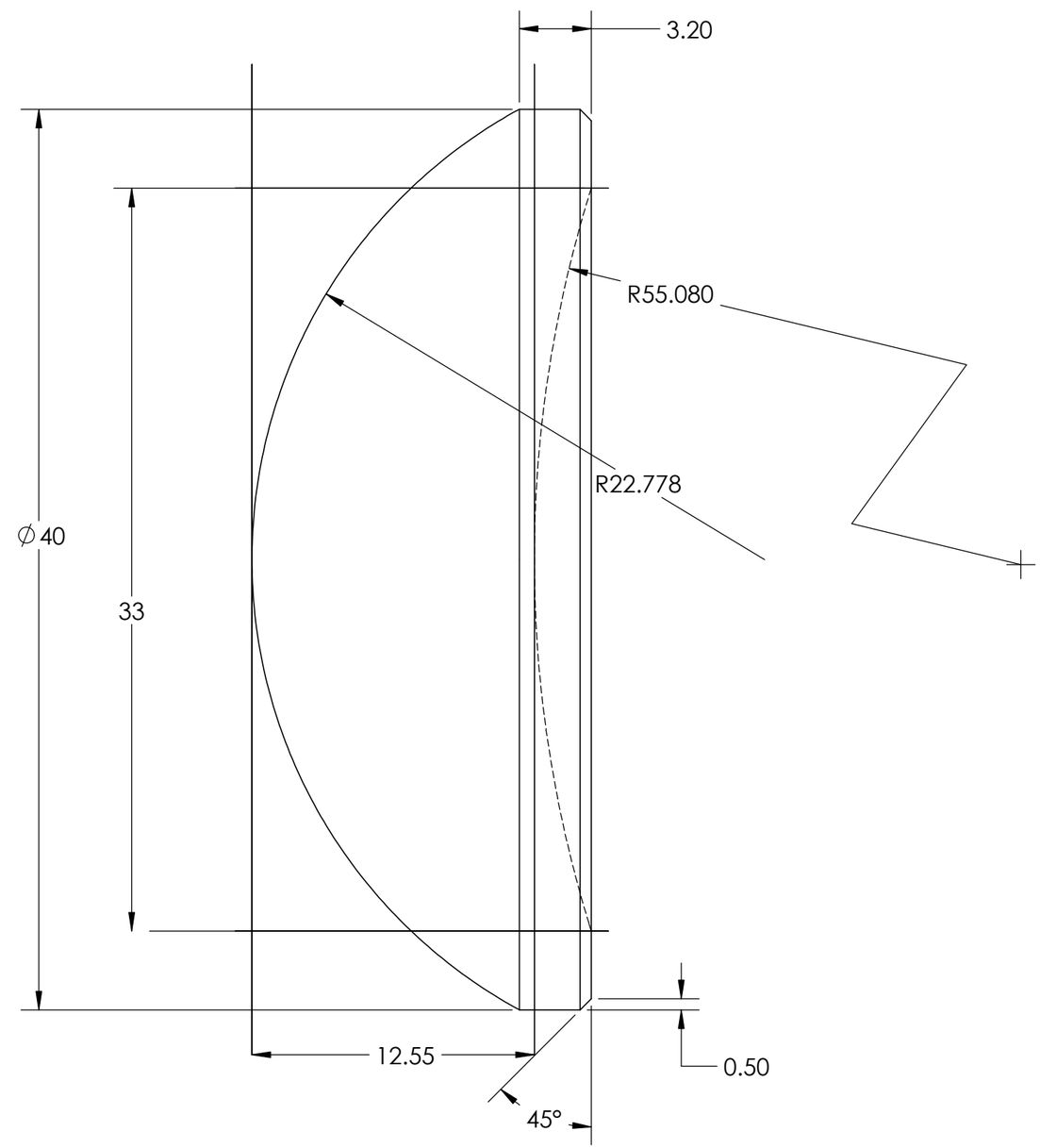

Notes:
1. ALL DIMENSIONS IN MILLIMETERS
2. MATERIAL PER MIL-G-174. GRADE A. FINE ANNEALED.
3. PITCH POLISH TO NOMINAL VALUE WITHIN POWER AND IRREGULARITY INDICATED. TEST WAVELENGTH = 546 NM OR EQUIVALENT.
4. MANUFACTURE PER MIL-0-13830
5. MADE FROM S-FPL53 Glass
6. RADII TOLERANCES PERTAIN TO TESTPLATES, AND IRR TOLERANCES ARE: SPHERICAL ERROR IN RIGHGS FROM TESTPLATE FIT, AND IRREGULARITY IN FRINGES OVER THE CLEAR APERATURES.
7. COSMETIC QUALITY: 20-10 OVER ANY 5 MM SECTION OF THE CLEAR APERTURES
8. BEVEL EDGES AT 45 DEGREES TO 0.3MM MAX FACE WIDTH.
9. MECHANICAL WEDGE LESS THAN 2 ARC-MINUTES.
10. GROUND FLAT FACE ON CONCAE SURFACE, SAG = 2.64 ±0.03. PERP. TO AXIS WITHIN 2 ARC-MINUTES.
11. DIAMETER 40.0 +.0/ -.03
12. AR COAT AIR-TO-GLASS FACES (MULTILAYER). LESS THAN 0.5X REFLECTANCE/SURFACE FROM 430 TO 650 NM, FROM 0 TO 30 DEGREES ANGLE OF INCIDENCE.
13. BLACKEN GROUND FACE AND EDGES, DIMENSIONS APPLY AFTER BLACKENING
14. PROTECTIVE BAG AND TAG. "ELEMENT B. 050211-002"

Status:

BILL OF MATERIALS

NEXT ASSY Description	NEXT ASSY Number

THIRD ANGLE PROJECTION

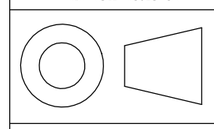

UNLESS OTHERWISE SPECIFIED TOLERANCES ARE:

1 PLACE DIM ±1/16	2 PLACE DIM ±.02	3 PLACE DIM ±.005	ANGLES ±1°

1. DIMENSIONS ARE IN INCHES
2. DIMENSION LIMITS HELD AFTER PLATING.
3. REMOVE BURRS AND SHARP EDGES .015 MAX.
4. MACHINED FILLET RADII .0150-.030.
5. MACHINED DIAMETERS ON A COMMON CENTERLINE CONCENTRIC WITHIN .OO5
6. PERPENDICULARITY & PARALLELISM OF MACHINED SURFACES .002 PER INCH. MAX .012 INCHES FOR SINGLE SURFACE.

DO NOT SCALE DRAWING

APPROVALS	DATE
DRAWN	10/4/2012
ENGINEER	B. HOBSON
CHECKED	
PROJECT NO.	901101
PROJECT	OCEAN IMAGING
WEIGHT	

Monterey Bay Aquarium Research Institute
MBARI
7700 Sandholdt RD.
Moss Landing, CA 95039
PH: (831) 775-1700

OI WIDE ANGLE OPTICS ELEMENT B REV2

SIZE B | DWG. NO. P-10020891 | REV. 2

SCALE 2:1 | CAD FILE: | SHEET 1 OF 1