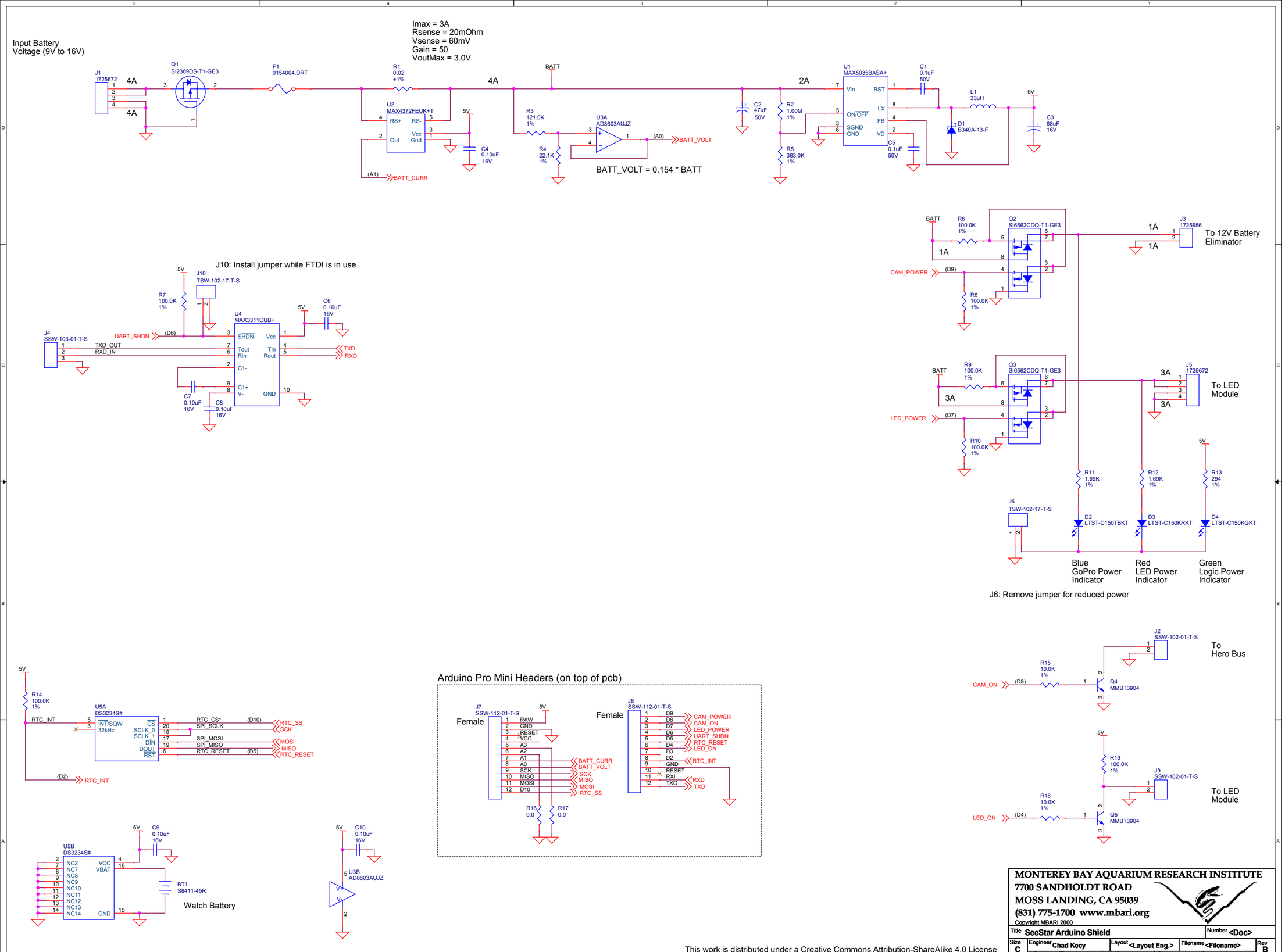

MONTEREY BAY AQUARIUM RESEARCH INSTITUTE
7700 SANDHOLDT ROAD
MOSS LANDING, CA 95039
(831) 775-1700 www.mbari.org

Copyright MBARI 2000

Title: SeeStar Arduino Shield			Number: <Doc>
Size: C	Engineer: Chad Kecy	Layout: <Layout Eng.>	Filename: <Filename>
	Date: Thursday, July 16, 2015	Sheet 1 of 1	Rev: B

This work is distributed under a Creative Commons Attribution-ShareAlike 4.0 License