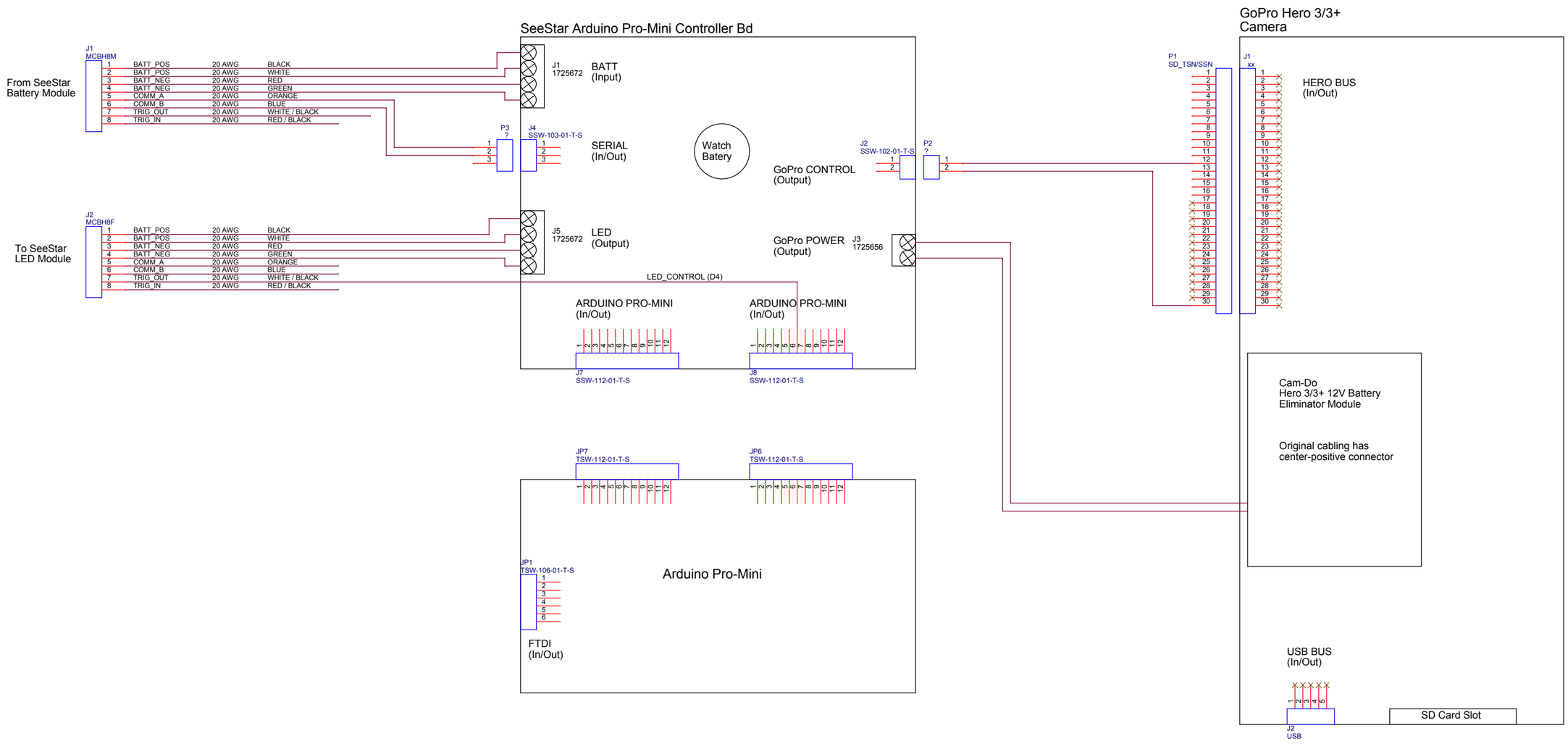

MONTEREY BAY AQUARIUM RESEARCH INSTITUTE
7700 SANDHOLDT ROAD
MOSS LANDING, CA 95039
(831) 775-1700 www.mbari.org
Copyright MBARI 2000

Title SeeStar Arduino Camera Housing			Number <Doc>
Size C	Engineer Chad Kecy	Layout <Layout Eng.>	Filename <Filename>	Rev B
	Date: Monday, July 20, 2015	Sheet 2 of 6	

This work is distributed under a Creative Commons Attribution-ShareAlike 4.0 License