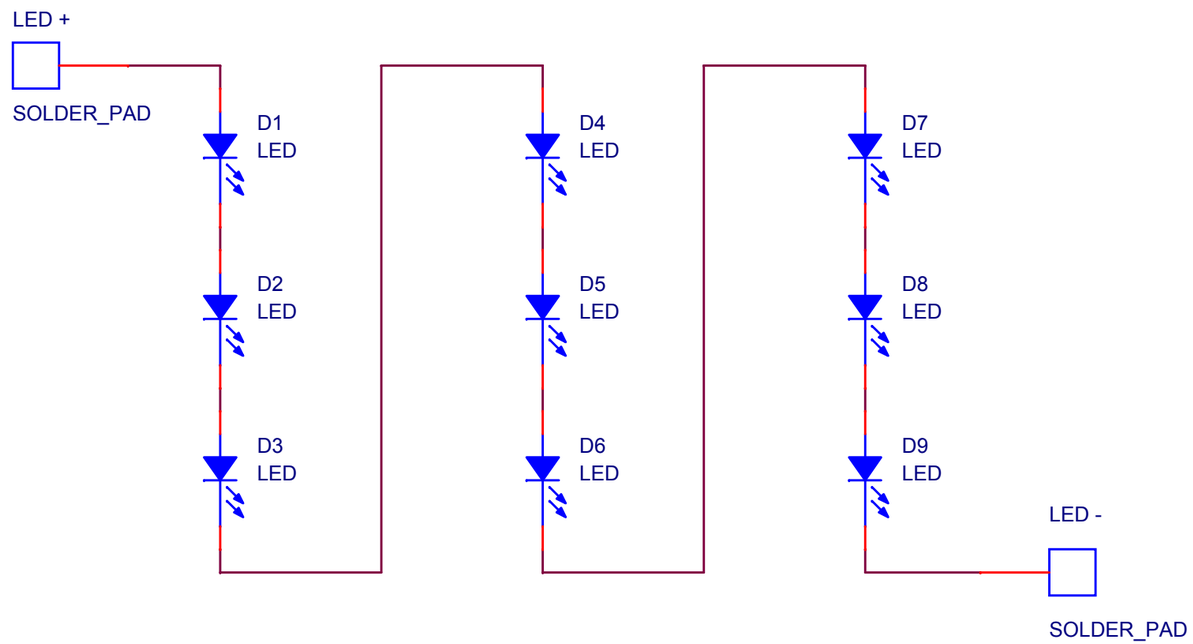

LED IS 9 UNITS CREE PN. XMLAWT-00-0000-000LT40E4

NOTES:

1. MINIMUM TRACE WIDTH 50 MIL.
2. PROPER LED ALIGNMENT ON SOLDER PAD IS IMPORTANT FOR MAINTAINING LENS EFFICENCY.
3. MAXIMUM LED CURRENT 3000mA.

MONTEREY BAY AQUARIUM RESEARCH INSTITUTE
7700 SANDHOLDT ROAD
MOSS LANDING, CA 95039

PHONE (831) 775-1700 www.mbari.org

COPYRIGHT © 2012 MBARI

MAY NOT BE COPIED WITHOUT PERMISSION

Title

SCPI 9 LED LIGHT PCB

Size	Engineer:	Number	Rev
A	**Mark Chaffey** EMAIL: chma@mbari.org (831) 775-1708	**10020890SCH-1-A**	A
	Date: Tuesday, October 30, 2012	Filename **10020890-scpi_9ledlight.dsn**	Sheet 1 of 1