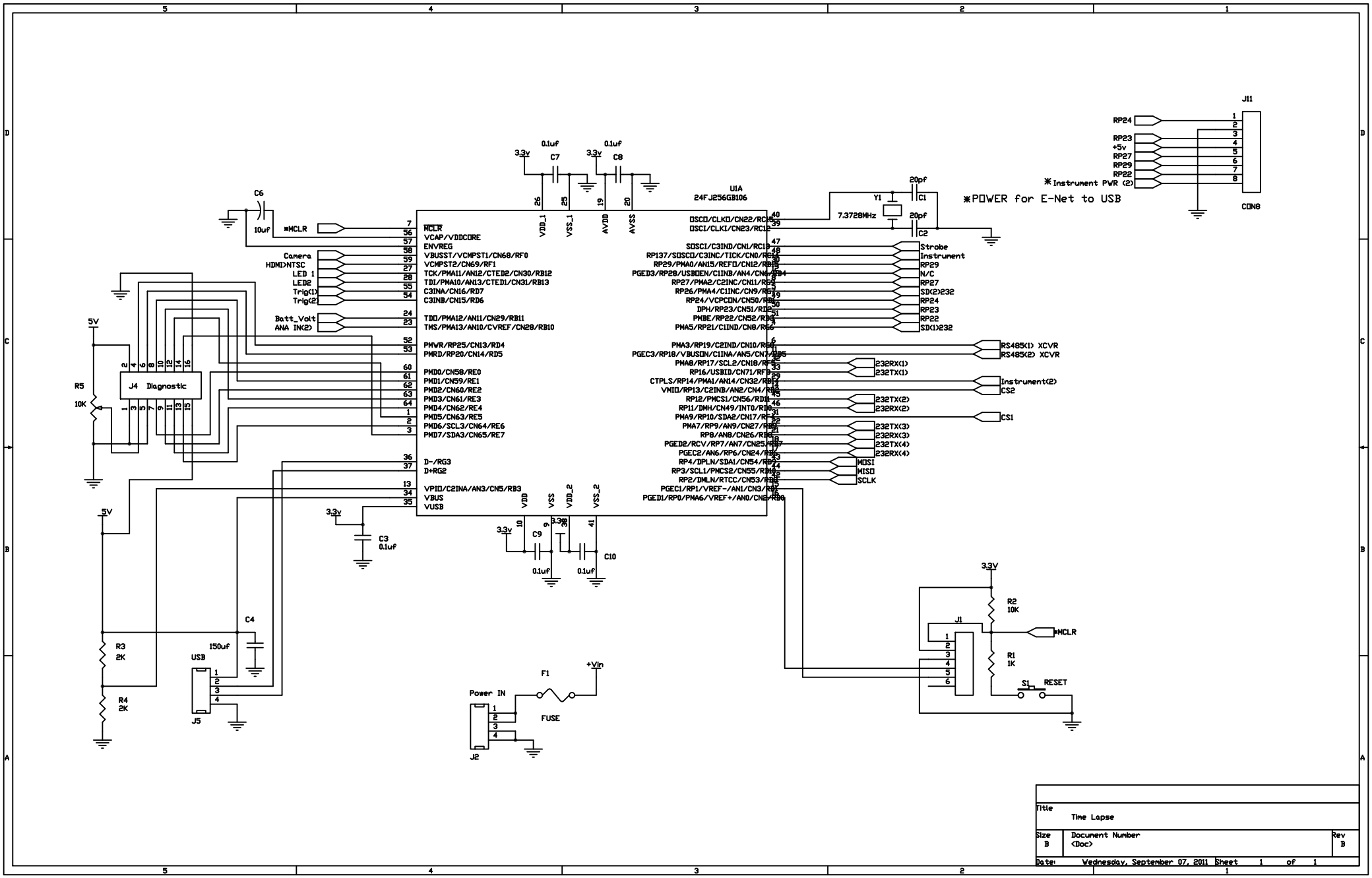
U1A
24FJ256GB106
MCLR
VCAP/VDDCORE
ENVREG
VBUSST/VCMPST1/CN68/RF0
VCMPST2/CN69/RF1
TCK/PMA11/AN12/CTED2/CN30/RB12
TDI/PMA10/AN13/CTED1/CN31/RB13
C3INA/CN16/RD7
C3INB/CN15/RD6
TDO/PMA12/AN11/CN29/RB11
TMS/PMA13/AN10/CVREF/CN28/RB10
PMWR/RP25/CN13/RD4
PMRD/RP20/CN14/RD5
PMD0/CN58/RE0
PMD1/CN59/RE1
PMD2/CN60/RE2
PMD3/CN61/RE3
PMD4/CN62/RE4
PMD5/CN63/RE5
PMD6/SCL3/CN64/RE6
PMD7/SDA3/CN65/RE7
D-/RG3
D+RG2
VPIO/C2INA/AN3/CN5/RB3
VBUS
VUSB
VDD_1
VSS_1
AVDD
AVSS
VDD
VSS
VDD_2
VSS_2
OSCO/CLKO/CN22/RC15
OSCI/CLKI/CN23/RC12
SOSCI/C3IND/CN1/RC13
RP137/SOSCO/C3INC/TICK/CN0/RC14
RP29/PMA0/AN15/REFO/CN12/RB15
PGED3/RP28/USBOEN/C1INB/AN4/CN6/RB4
RP27/PMA2/C2INC/CN11/RG9
RP26/PMA4/C1INC/CN9/RG8
RP24/VCPCON/CN50/RB8
DPH/RP23/CN51/RD12
PMBE/RP22/CN52/RD3
PMA5/RP21/C1IND/CN8/RG6
PMA3/RP19/C2IND/CN10/RG7
PGEC3/RP18/VBUSON/C1INA/AN5/CN7/RB5
PMA8/RP17/SCL2/CN18/RF5
RP16/USBID/CN71/RF3
CTPLS/RP14/PMA1/AN14/CN32/RB7
VMIO/RP13/C2INB/AN2/CN4/RB3
RP12/PMCS1/CN56/RD11
RP11/DMH/CN49/INT0/RD0
PMA9/RP10/SDA2/CN17/RF4
PMA7/RP9/AN9/CN27/RB9
RP8/AN8/CN26/RB8
PGED2/RCV/RP7/AN7/CN25/RB7
PGEC2/AN6/RP6/CN24/RB6
RP4/DPLN/SDA1/CN54/RD9
RP3/SCL1/PMCS2/CN55/RD10
RP2/DMLN/RTCC/CN53/RD1
PGEC1/RP1/VREF-/AN1/CN3/RB1
PGED1/RP0/PMA6/VREF+/AN0/CN2/RB0
Camera
HDMI>NTSC
LED 1
LED2
Trig(1)
Trig(2)
Batt_Volt
ANA IN(2)
Strobe
Instrument
RP29
N/C
RP27
SD(2)232
RP24
RP23
RP22
SD(1)232
RS485(1) XCVR
RS485(2) XCVR
232RX(1)
232TX(1)
Instrument(2)
CS2
232TX(2)
232RX(2)
CS1
232TX(3)
232RX(3)
232TX(4)
232RX(4)
MOSI
MISO
SCLK
Y1
7.3728MHz
C1
C2
20pf
20pf
C6
10uf
C7
C8
C9
C10
C3
C4
150uf
0.1uf
3.3v
5V
R5
10K
J4 Diagnostic
R3
2K
R4
2K
USB
J5
Power IN
J2
F1
FUSE
+Vin
J1
R2
10K
R1
1K
S1
RESET
J11
CON8
RP24
RP23
+5v
RP27
RP29
RP22
*Instrument PWR (2)
*POWER for E-Net to USB
Title
Time Lapse
Size
B
Document Number
<Doc>
Rev
B
Date: Wednesday, September 07, 2011
Sheet 1 of 1

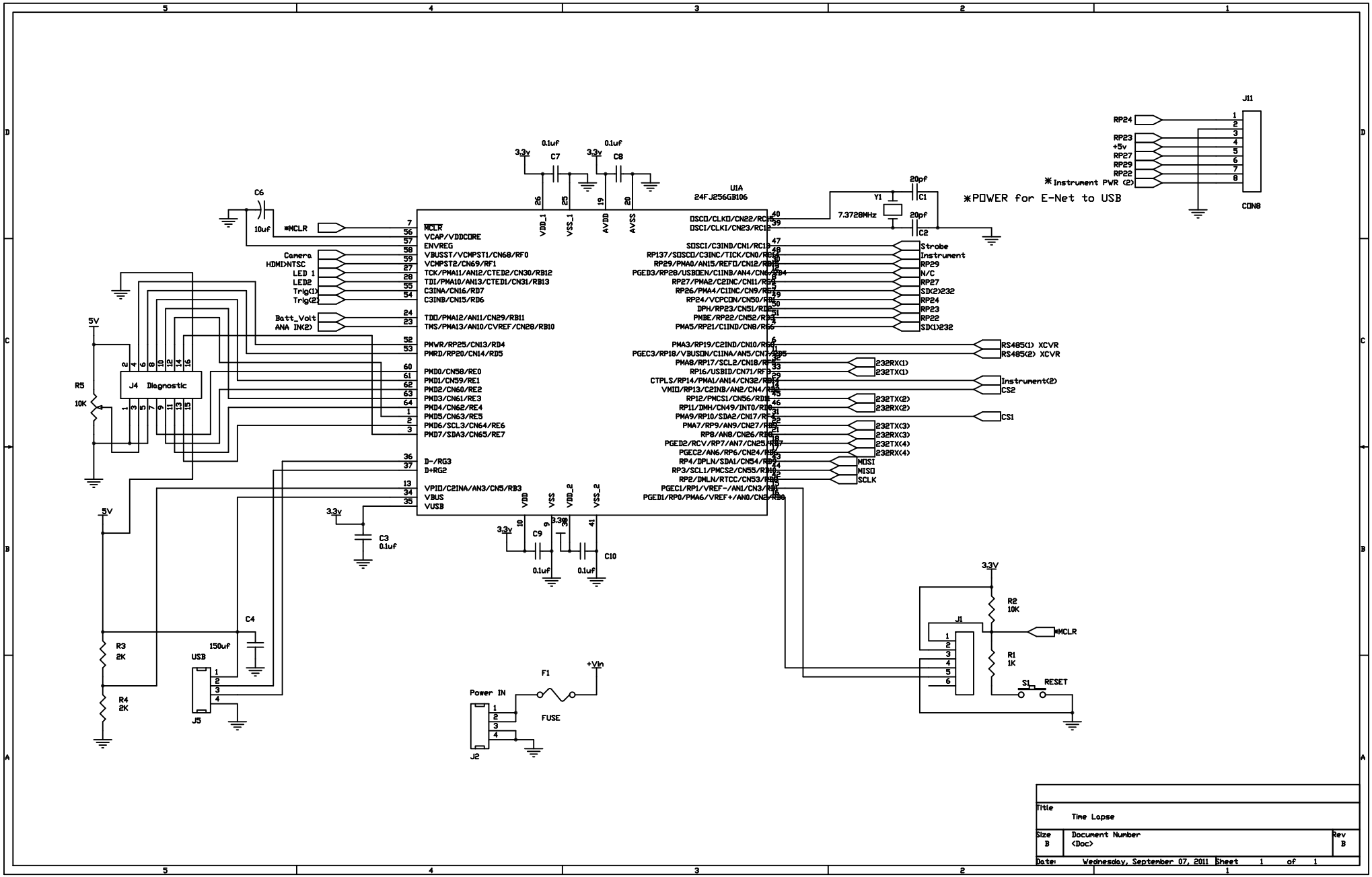
U1A
24FJ256GB106
MCLR
VCAP/VDDCORE
ENVREG
VBUSST/VCMPST1/CN68/RF0
VCMPST2/CN69/RF1
TCK/PMA11/AN12/CTED2/CN30/RB12
TDI/PMA10/AN13/CTED1/CN31/RB13
C3INA/CN16/RD7
C3INB/CN15/RD6
TDO/PMA12/AN11/CN29/RB11
TMS/PMA13/AN10/CVREF/CN28/RB10
PMWR/RP25/CN13/RD4
PMRD/RP20/CN14/RD5
PMD0/CN58/RE0
PMD1/CN59/RE1
PMD2/CN60/RE2
PMD3/CN61/RE3
PMD4/CN62/RE4
PMD5/CN63/RE5
PMD6/SCL3/CN64/RE6
PMD7/SDA3/CN65/RE7
D-/RG3
D+RG2
VPIO/C2INA/AN3/CN5/RB3
VBUS
VUSB
VDD_1
VSS_1
AVDD
AVSS
VDD
VSS
VDD_2
VSS_2
OSCO/CLKO/CN22/RC15
OSCI/CLKI/CN23/RC12
SOSCI/C3IND/CN1/RC13
RP137/SOSCO/C3INC/TICK/CN0/RC14
RP29/PMA0/AN15/REFO/CN12/RB15
PGED3/RP28/USBOEN/C1INB/AN4/CN6/RB4
RP27/PMA2/C2INC/CN11/RB11
RP26/PMA4/C1INC/CN9/RB9
RP24/VCPCON/CN50/RB8
DPH/RP23/CN51/RD12
PMBE/RP22/CN52/RD3
PMA5/RP21/C1IND/CN8/RG6
PMA3/RP19/C2IND/CN10/RG7
PGEC3/RP18/VBUSON/C1INA/AN5/CN7/RB5
PMA8/RP17/SCL2/CN18/RF5
RP16/USBID/CN71/RF3
CTPLS/RP14/PMA1/AN14/CN32/RB14
VMIO/RP13/C2INB/AN2/CN4/RB2
RP12/PMCS1/CN56/RD11
RP11/INM1/CN49/INT0/RD0
PMA9/RP10/SDA2/CN17/RF4
PMA7/RP9/AN9/CN27/RB9
RP8/AN8/CN26/RB8
PGED2/RCV/RP7/AN7/CN25/RB7
PGEC2/AN6/RP6/CN24/RB6
RP4/DPLN/SDA1/CN54/RB4
RP3/SCL1/PMCS2/CN55/RB3
RP2/DMLN/RTCC/CN53/RB2
PGEC1/RP1/VREF-/AN1/CN3/RB1
PGED1/RP0/PMA6/VREF+/AN0/CN2/RB0
Strobe
Instrument
RP29
N/C
RP27
SDO2)232
RP24
RP23
RP22
SDI1)232
RS485(1) XCVR
RS485(2) XCVR
232RX(1)
232TX(1)
Instrument(2)
CS2
232TX(2)
232RX(2)
CS1
232TX(3)
232RX(3)
232TX(4)
232RX(4)
MOSI
MISO
SCLK
Camera
HDMI>NTSC
LED 1
LED2
Trig(1)
Trig(2)
Batt_Volt
ANA INK2)
*MCLR
C6
10uf
C7
C8
0.1uf
3.3v
C9
C10
C3
0.1uf
Y1
7.3728MHz
C1
C2
20pf
*POWER for E-Net to USB
J11
RP24
RP23
+5v
RP27
RP29
RP22
*Instrument PWR (2)
CON8
5V
R5
10K
J4 Diagnostic
R3
2K
R4
2K
C4
150uf
USB
J5
Power IN
J2
F1
FUSE
+Vin
R2
10K
J1
R1
1K
S1
RESET
Title
Time Lapse
Size
B
Document Number
<Doc>
Rev
B
Date: Wednesday, September 07, 2011
Sheet 1 of 1