REV	CHANGE	INITIAL
01	U6,7 INPUT GROUND TO HV AGND	ECM
02	CORRECT P3, P4 PINOUTS	ECM
03	CHG R31,32 FOR AVAILABILITY	ECM
04	CHG R28 FOR INCREASED ADJ RANGE	ECM

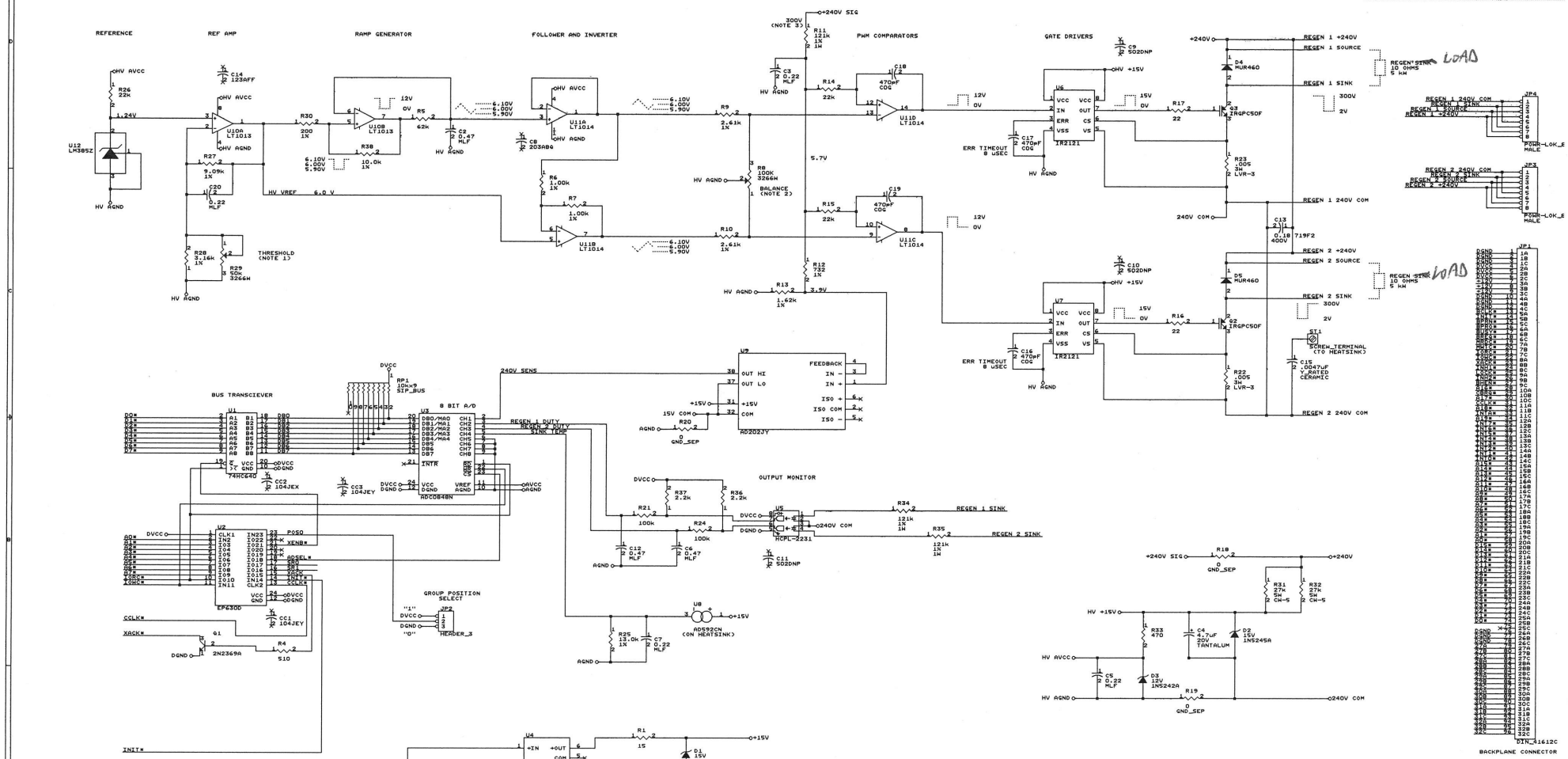

SCALE FACTORS:

240V SENS	76 V/V	1.5 V/bit
DUTY CYCLE	109% - (22 %/V)	109% - (.43 %/bit)
SINK TEMP	77 K/V	1.5 K/bit

NOTE 3: VOLTAGES AND WAVEFORMS SHOWN ARE NOMINAL AND REPRESENT TYPICAL OPERATION DURING 9 kW REGEN EVENT.

NOTE 2: ADJUST FOR EQUAL CHANNEL BALANCE AT THRESHOLD.

NOTE 1: ADJUST FOR THRESHOLD (BEGINNING OF REGEN CONTROL ACTION) AT 295 VDC.

ENGINEER MELLINGER	DATE 27 AUG 92	MONTEREY BAY AQUARIUM RESEARCH INSTITUTE 160 Central Avenue Pacific Grove, CA 93950
CHECKED MATTHEWS	DATE 11 SEPT 92	
APPROVED	DATE	IBC REGEN CONTROLLER
APPROVED	DATE	
APPROVED	DATE	
PWB NO. 4131	SIZE D	FSCM NO	DWG NO 4132
ASS'Y NO. 4130	SCALE		SHEET
December 17, 1992			