Terminal Block Board

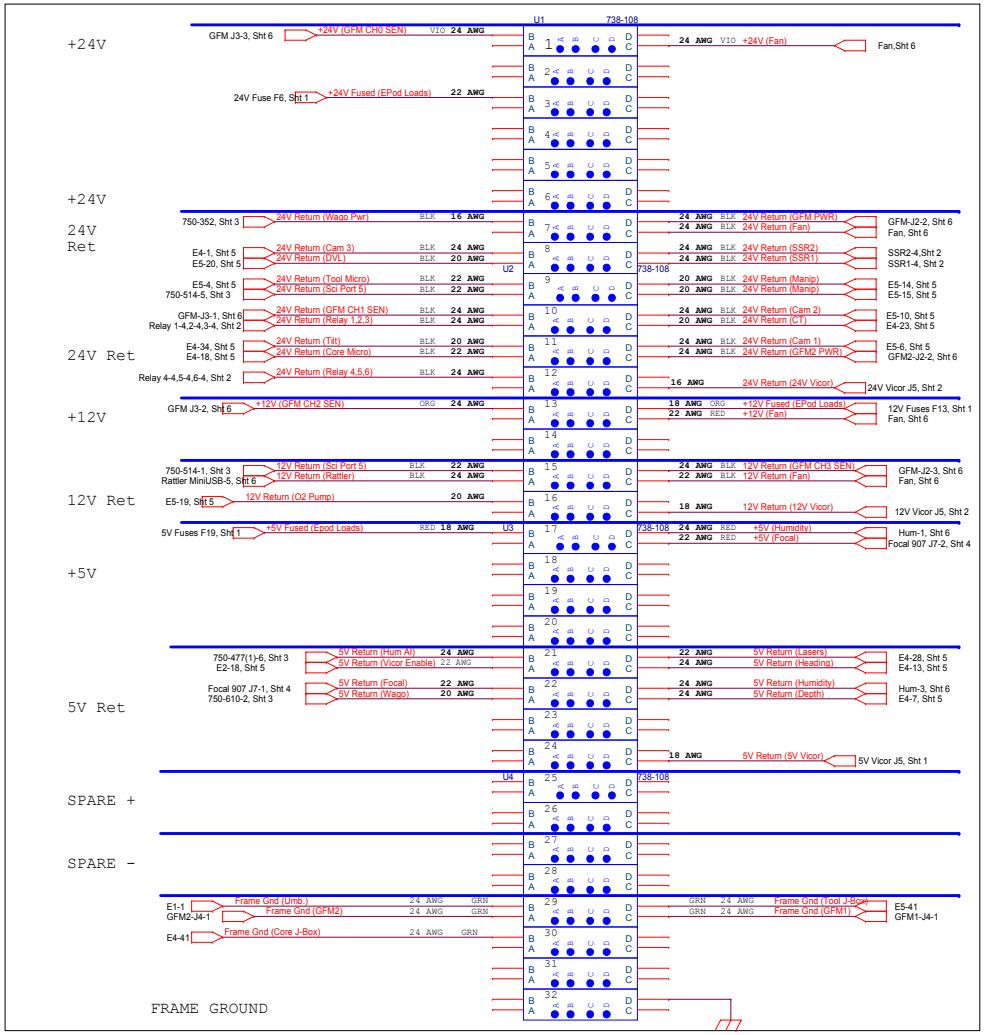

Fuse Block Board

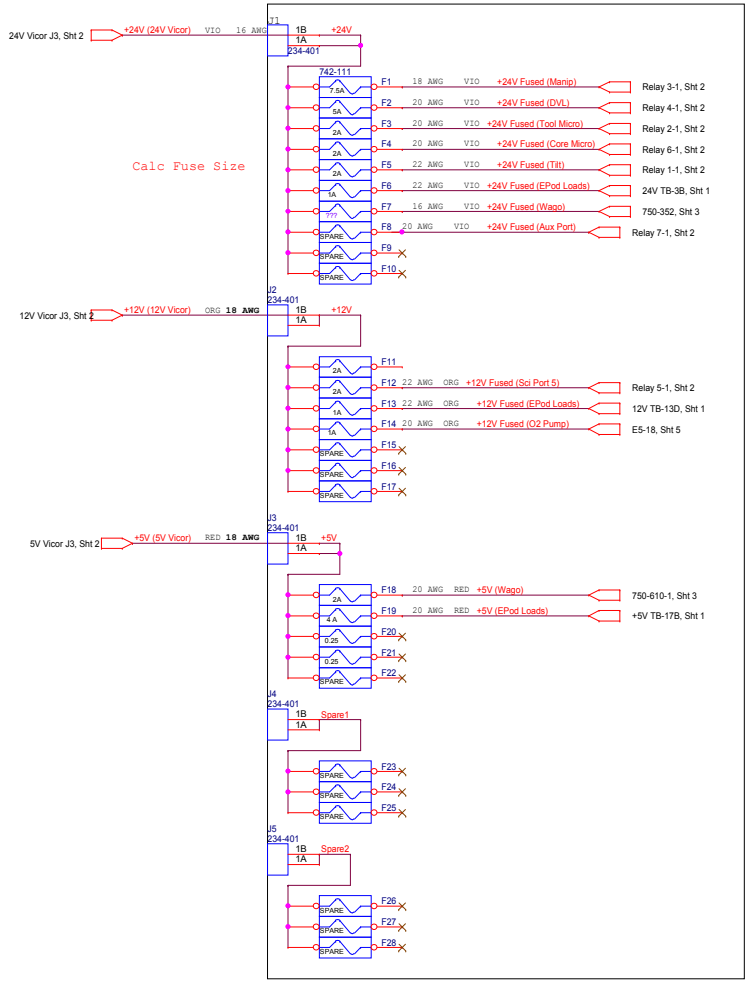

+375V

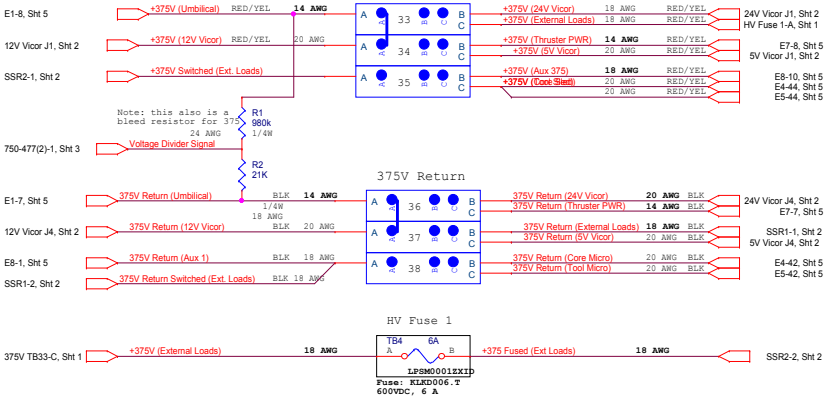

Monterey Bay Aquarium Research Institute 7700 Sandholdt Road, Moss Landing, CDA 95039			
Title 1. EPOD: Terminal and Fuse Blocks			Project <Project>
Engineer <Engineer>	Size C	Document Number <Doc>	Part Number <Part Number>	Project File <Project File>	Rev <Rev>
Designer <Designer>	Date: Wednesday, April 06, 2016		Sheet 1 of 78		