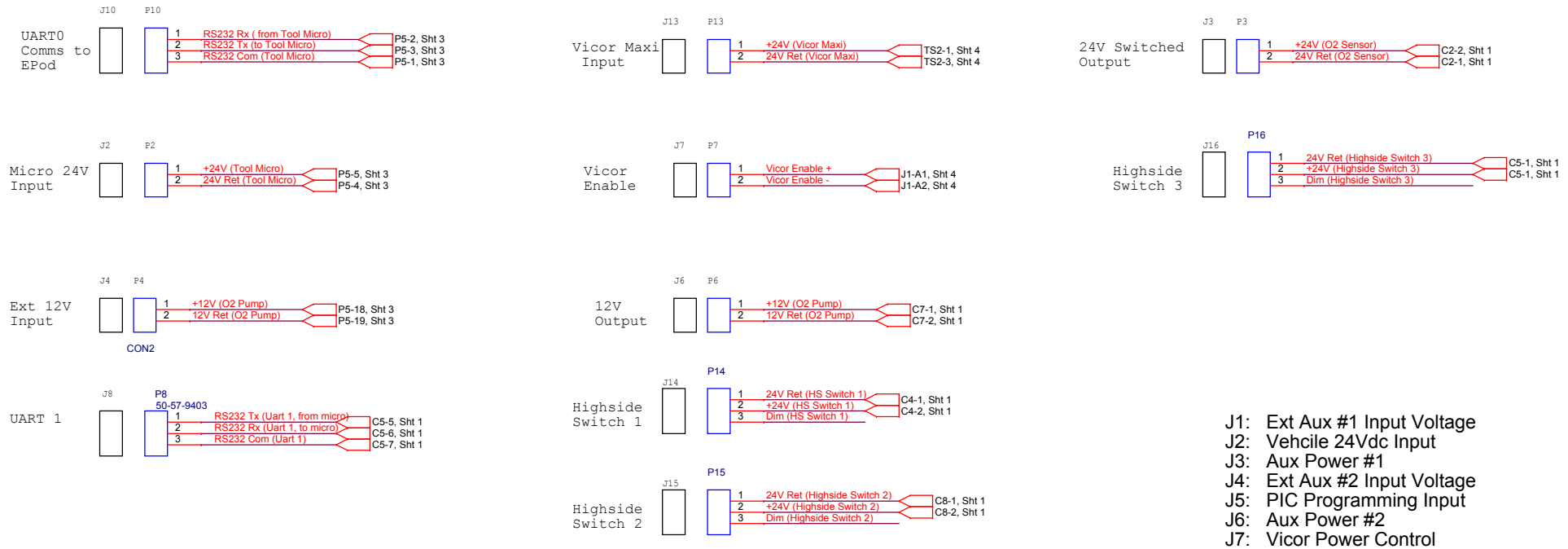

Micro Board Connector Placement

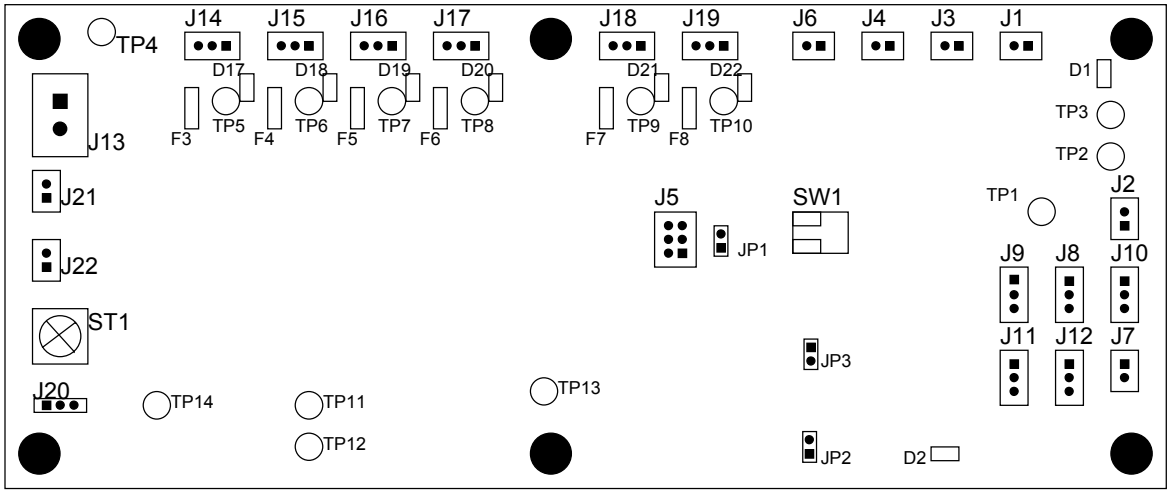

J1: Ext Aux #1 Input Voltage
J2: Vehcile 24Vdc Input
J3: Aux Power #1
J4: Ext Aux #2 Input Voltage
J5: PIC Programming Input
J6: Aux Power #2
J7: Vicor Power Control
J8: Aux RS-232 #1
J9: Aux RS-232 #2
J10: Vehicle RS-232
J11: Vehcile RS-485 #1
J12: Vehcile RS-485 #2
J13: 24Vdc Vicor Input
J14: Highside Switch #1 Output
J15: Highside Switch #2 Output
J16: Highside Switch #3 Output
J17: Highside Switch #4 Output
J18: Highside Switch #5 Output
J19: Highside Switch #6 Output
J20: Jumper for GF Calibration
J21: Water Sensor #1
J22: Water Sensor #2
ST1: Seawater Reference Connection

MBARI	Monterey Bay Aquarium Research Institute 7700 Sandhold Road, Moss Landing, CA 95039			
	Title 2. Tool Sled JBox: Micro			Project <Project>
Engineer <Engineer> Designer <Designer>	Size B	Document Number <Doc>	Part Number <Part Number>	Project File <Project File>	Rev <Rev>
	Date: Tuesday, March 15, 2016		Sheet 1 of 1	