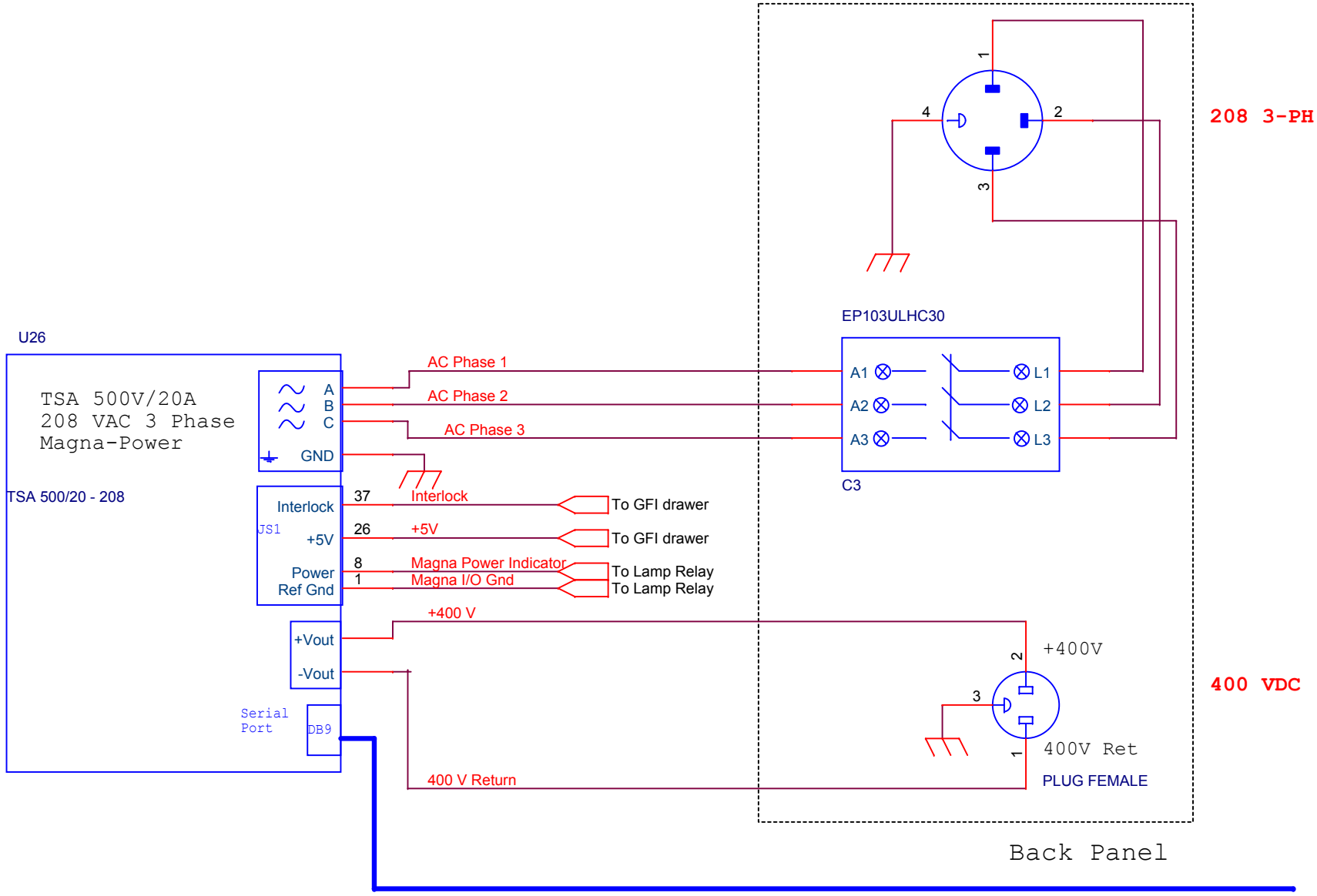

M B A R I	**Monterey Bay Aquarium Research Institute** 7700 Sandhold Road, Moss Landing, CA 95039			
	Title MiniROV:Magna Connections			Project <Project>
Engineer <Engineer>	Size A	Document Number <Doc>	Part Number <Part Number>	Project File <Project File>	Rev <Rev>
Designer <Designer>	Date: Monday, October 20, 2014		Sheet 1 of 1	