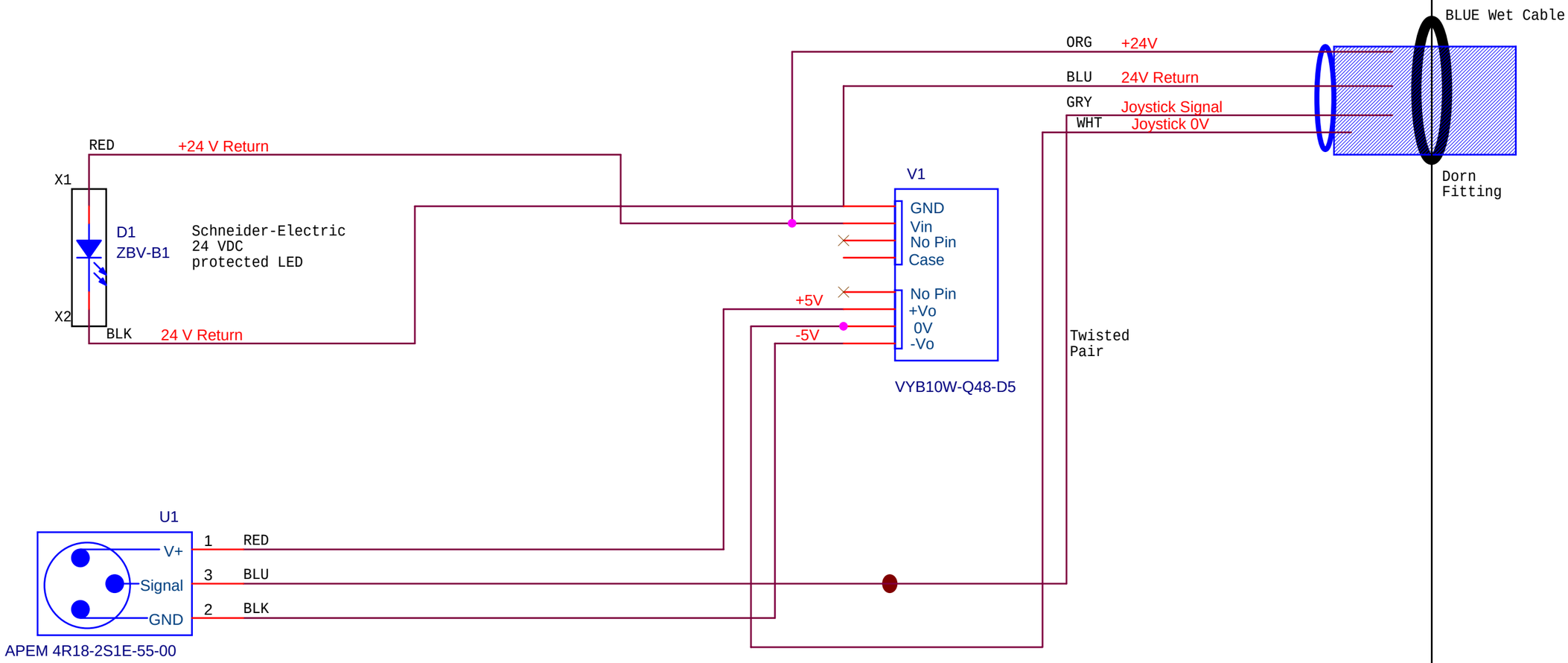

Monterey Bay Aquarium Research Institute
7700 Sandhold Road, Moss Landing, CA 95039

Title: <Title>				
Engineer: <Engineer>	Size: A	Document Number: <Doc>	Layout File: <Layout File>	Rev: <Rev>
Layout: <Layout>	Date: Thursday, September 13, 2012		Sheet 1 of 1	