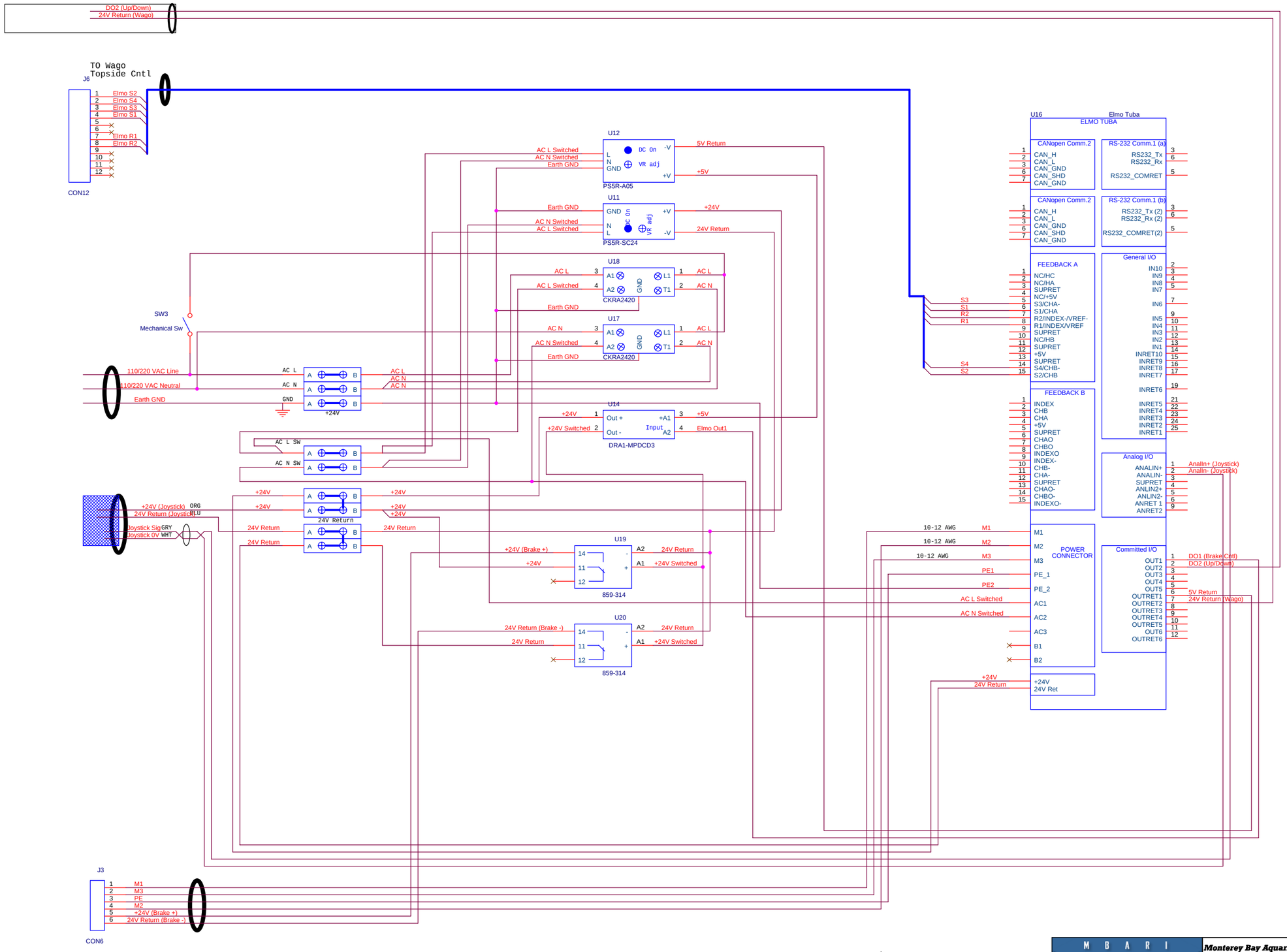

Monterey Bay Aquarium Research Institute
7700 Sandhold Road, Moss Landing, CA 95039

Title: MiniROV: Winch Controller Wiring

Engineer	Size	Document Number	Layout File	Rev
<Engineer>	C	<Doc>	<Layout File>	<Rev>
Layout: <Layout>	Date: Thursday, September 13, 2012		Sheet 1 of 1	