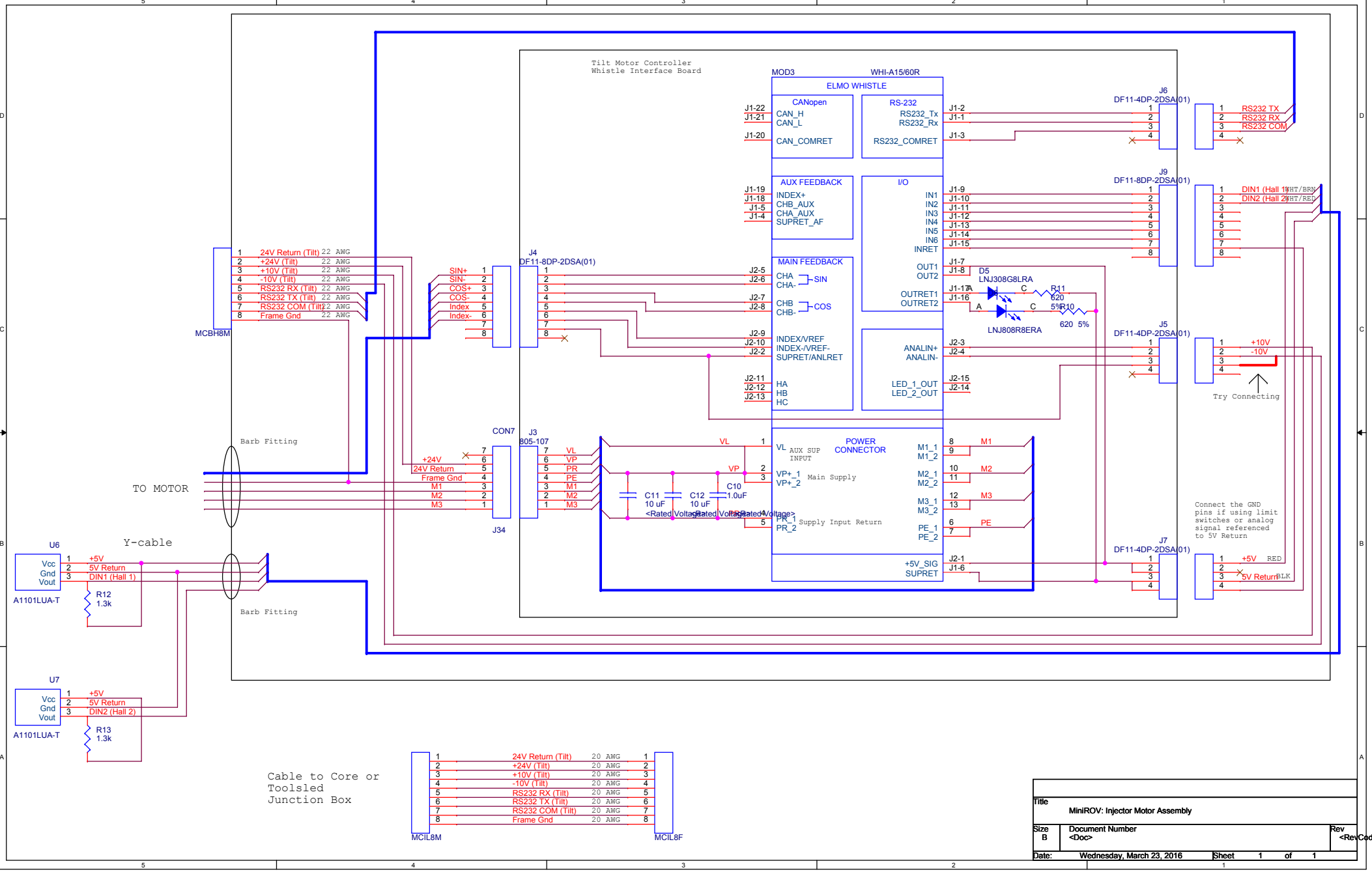

Title
MiniROV: Injector Motor Assembly

Size	Document Number	Rev
B	<Doc>	<RevCod

Date: Wednesday, March 23, 2016 Sheet 1 of 1