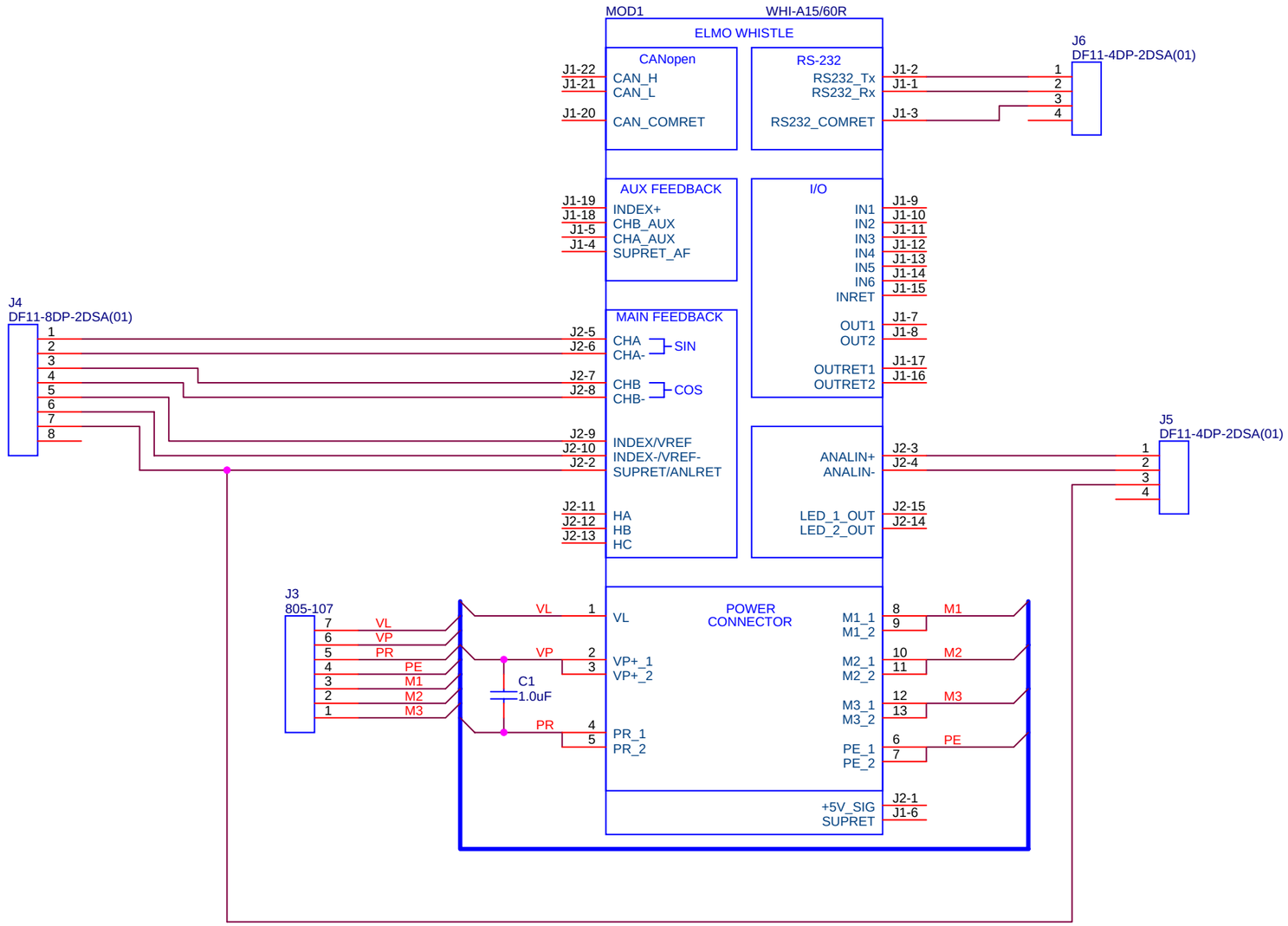

Title	MiniROV: Thruster Controller	
Size B	Document Number <Doc>	Rev <RevCode>
Date: Thursday, September 13, 2012	Sheet 0 of 13	