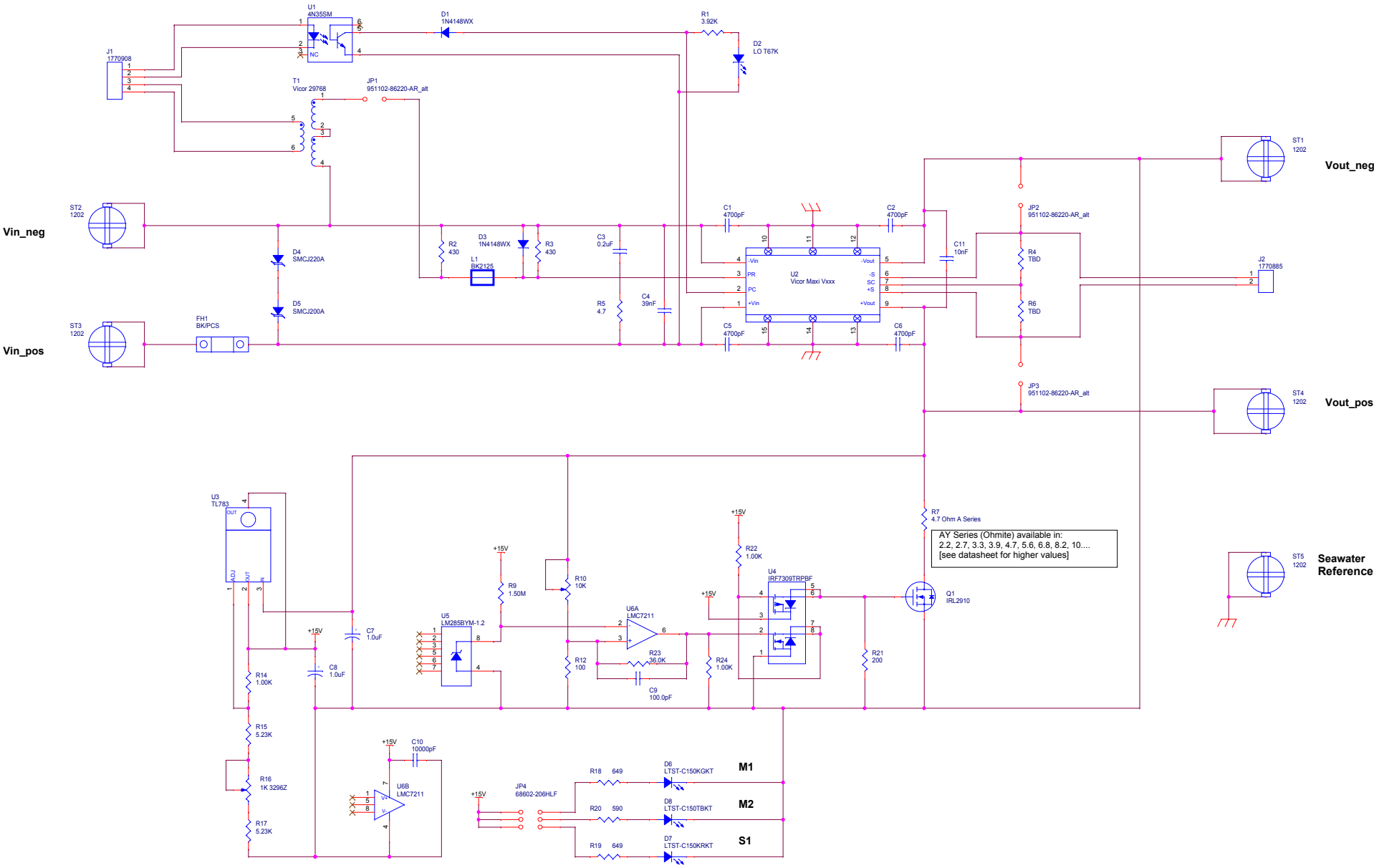

MONTEREY BAY AQUARIUM RESEARCH INSTITUTE
7700 SANDHOLDT ROAD
MOSS LANDING, CA 95039
(831) 775-1700 www.mbari.org

Copyright MBARI 2000

Title: Mini-ROV Vicor Maxi Carrier Board			Number: <Doc>
Size: C	Engineer: Kecy/Sherman	Layout: <Layout Eng.>	Filename: <Filename>
	Date: Sunday, July 31, 2011	Sheet 1 of 2	Rev: B