SeaLite® Sphere

- Easy Direct Replacement of a Halogen Light
- 6000 Meter (6013 Al) or 11000 Meter (Be-Cu) Depth Rated
- Available in Multiple AC & DC Configurations
- Available In Different Color Temperatures and Housing Materials
- Virtually Zero Maintenance With Over 50,000 Hours of Rated LED Lifespan
- Fully Dimmable

Patents Pending

DEEPSEA
POWER & LIGHT

SeaLite® Sphere

Finally, a true & simple LED equivalent to a Halogen light that does not require any compromises. Utilizing the latest in high brightness LED technology, the SeaLite Sphere provides incredible light output for its amazingly compact size. Engineered to be extremely rugged and reliable, this solid light encompasses a long list of useful and practical features. Automatic thermal shutdown, scratch-resistant sapphire crystal port, and its simple dimming options are just a few examples of features integrated into a spherical pressure housing rated to 6000m allowing this light to easily handle anything that the harsh ocean environment throws at it, from the splash zone to the deep ocean abyssal plains.

The SeaLite Sphere is ideal for any applications where space is at a premium, price is an important consideration, and lumens-to-weight ratio is one of the deciding factors.

MECHANICAL	
Body Material	Hard Anodized 6013-T8 Aluminum (standard) Beryllium copper (optional)
Window Material	Sapphire
Mounts	High Strength Plastic Mounting Collar (standard & included) Stainless Steel Yoke & Helmet Mounting Brackets (optional)
Weight in Air	710 g (1.56 lbs) for standard Al housing
Weight in Salt Water	267 g (0.58 lbs) for standard Al housing
Implodible Volume	127.82 cm³ (7.8 in³)
True Lumens / Watt	53 Lumens/Watt (120V version)
True Lumens / Weight in Water	25 Lumens/Gram for standard Al housing (120V version)
ENVIRONMENTAL	
Depth Rating	8,820 psi (6,000 m - 20,000 ft)
Test Pressure	10,000 psi
Crush Depth*	13,000 psi (8,964 msw - 29,578 fsw)
Min/Max Operation Temp.	-10°C to 40°C (14° to 104°F)
OPTICAL	
Color	Red, White 6k° Mix, White 9k°, Blue, Green
Lumens in Water**	Standard 120V AC/DC: 6000 Lumens typical (with 6k° Mix LED's) Optional 120V AC/DC: 6300 Lumens typical (with 9000°K LED's) Standard 10-36VDC: 3000 Lumens typical (with 6k° Mix LED's) Standard 20-36VDC: 5000 Lumens typical (with 6k° Mix LED's)
Color Temp	Standard: 6000°K (White 6k° Mix) Optional: 9000°K (White LED's)
Beam Pattern in Water***	Flood: 75° / Medium: 30°
Color Rendering Index (CRI)	77 (Standard White LED's)
ELECTRICAL	
Input	1.5A @ 120v AC Nominal (140v AC Max), 150W 1.0A @ 135v DC Nominal, 150v DC Max, 150W Max 10 - 36v DC, 1.7A @ 24v DC, ~41W 20 - 36v DC, 3.3A @ 24v DC, ~80W
Dimming	120v AC/DC Version: AC phase control dimmer & variable voltage (Variac) Low-Voltage Version: 0-5V Control loop

*Crush depth is based on one sample only.
**True amount of light leaving the fixture, as measured with a calibrated integrating sphere. (calibration traceable to NIST)
***Beam angle measured to full width half power in water.

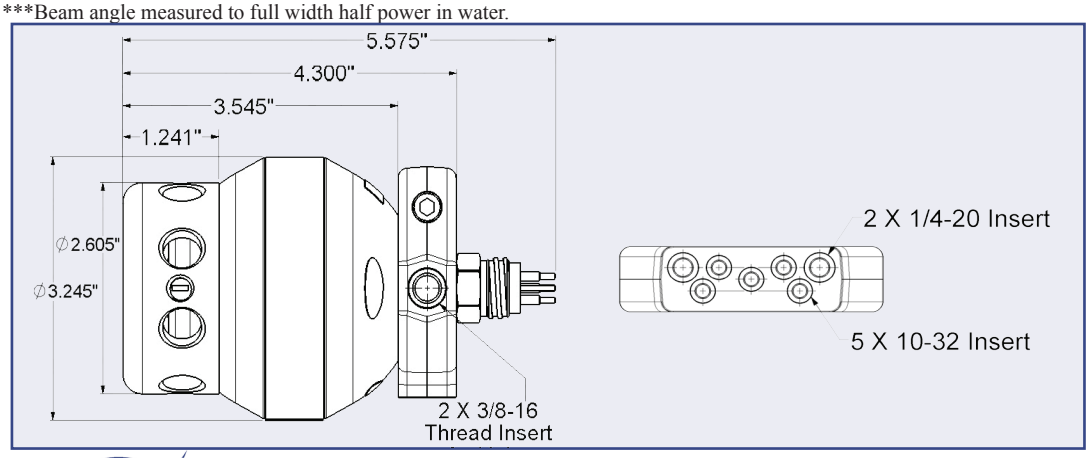

Standard Connectors

BH3MP
(1=Hot, 2=Neutral, 3=Ground to shell)

BH5MP
Used in LV dimming option only
(1=Pos, 2=Neg, 3=Ground to shell,
4= Not used, 5= Pos 0-5VDC control)
(Note: 0-5VDC Control ground to Pin 2)

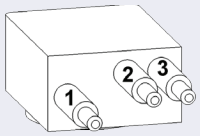

LPBH3MP
(1=Hot, 2=Neutral, 3=Ground to shell)

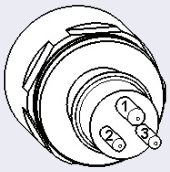

XSG3BCL
(1=Ground to shell, 2=Neutral, 3=Hot)

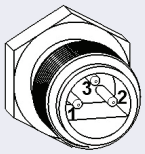

1503
(1=Hot, 2=Neutral, 3=Ground to shell)

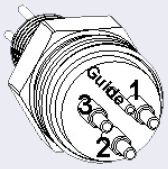

MCBH3MP
(1=Hot, 2=Neutral, 3=Ground to shell)

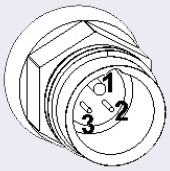

MSAJ3BCR
(1=Hot, 2=Neutral, 3=Ground to shell)

Patents Pending

DSPL ENG 712-029-001 Rev: 10/21/11
Specs subject to change without notice

DEEPSEA Power & Light®
4033 Ruffin Road
San Diego, CA 92123
ph: (858) 576-1261
www.deepsea.com
info@deepsea.com
fax: (858)576-0219