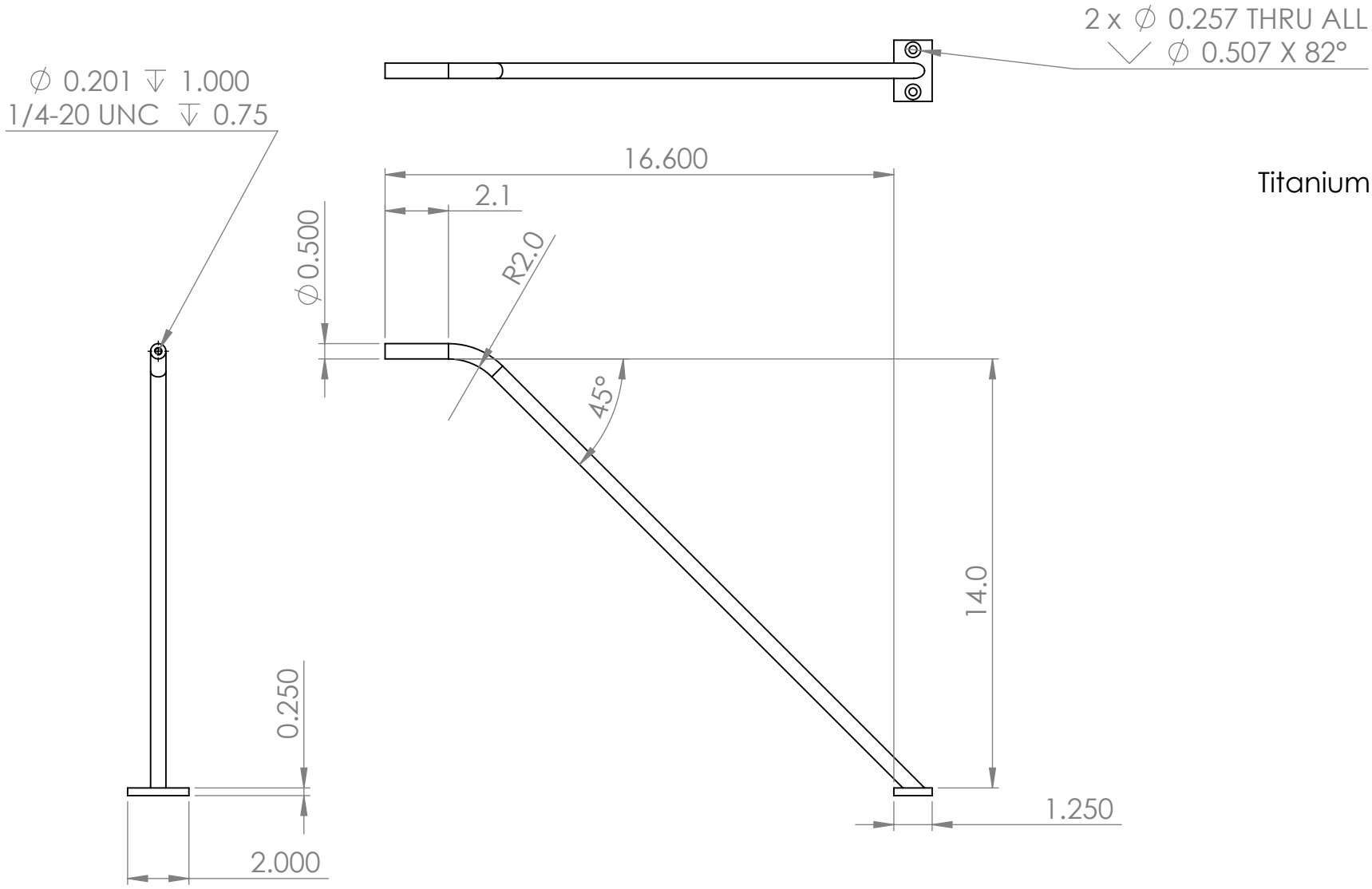

Titanium

UNLESS OTHERWISE SPECIFIED TOLERANCES ARE:			
1 PLACE DIM ±1/16	2 PLACE DIM ±.02	3 PLACE DIM ±.005	ANGLES ±1°

1. DIMENSIONS ARE IN INCHES
2. DIMENSION LIMITS HELD AFTER PLATING.
3. REMOVE BURRS AND SHARP EDGES .015 MAX.
4. MACHINED FILLET RADII .0150-.030.
5. MACHINED DIAMETERS ON A COMMON CENTERLINE CONCENTRIC WITHIN .OO5
6. PERPENDICULARITY & PARALLELISM OF MACHINED SURFACES .002 PER INCH. MAX .012 INCHES FOR SINGLE SURFACE.

Vendor:

Material: 6061-T6 (SS)

APPROVALS	DATE
DRAWN	12/22/2023
CHECKED	
ENGINEER	Francois Cazenave
PROJECT NO.	
PROJECT	
WEIGHT	0.50 lb

Monterey Bay Aquarium Research Institute

MBARI
7700 Sandholdt RD.
Moss Landing, CA 95039
PH: (831) 775-1700

Light_Bar_Support

SIZE	DWG. NO.	REV.
A		

SCALE:1:5 SHEET 1 OF 1