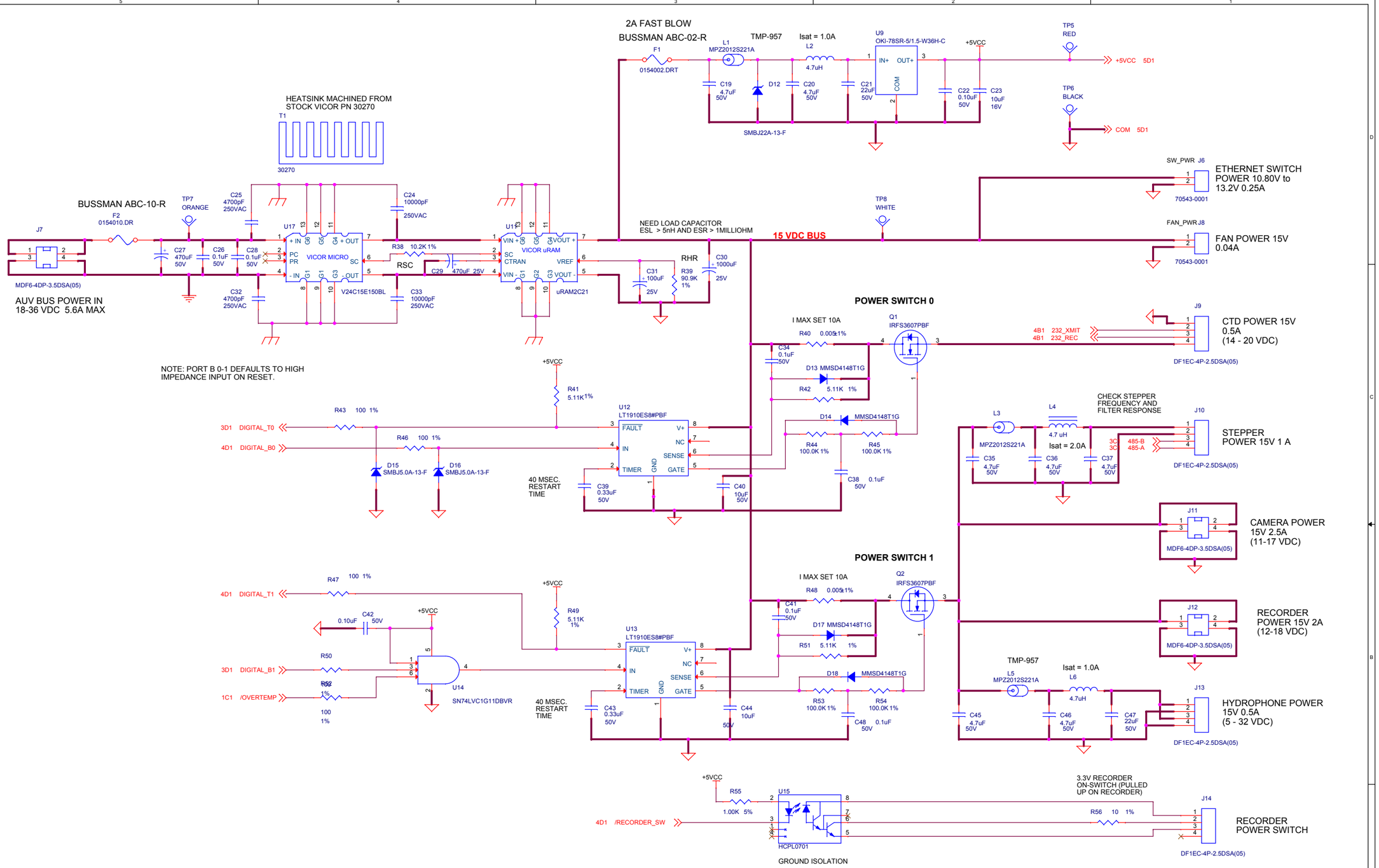

MONTEREY BAY AQUARIUM RESEARCH INSTITUTE
7700 SANDHOLDT ROAD
MOSS LANDING, CA 95039

PHONE (831) 775-1700 www.mbari.org

COPYRIGHT © 2014 MBARI
MAY NOT BE COPIED WITHOUT PERMISSION

M B A R I

Title: **i2MAP I/O BOARD POWER CONVERSION & 12V SWITCHING**

Size	Engineer: Mark Chaffey EMAIL: chma@mbari.org (831) 775-1708	Number	Rev
C	Date: Sunday, April 05, 2015	Filename <Filename>	Sheet 2 of 2
		10021134SCH-2-A	B