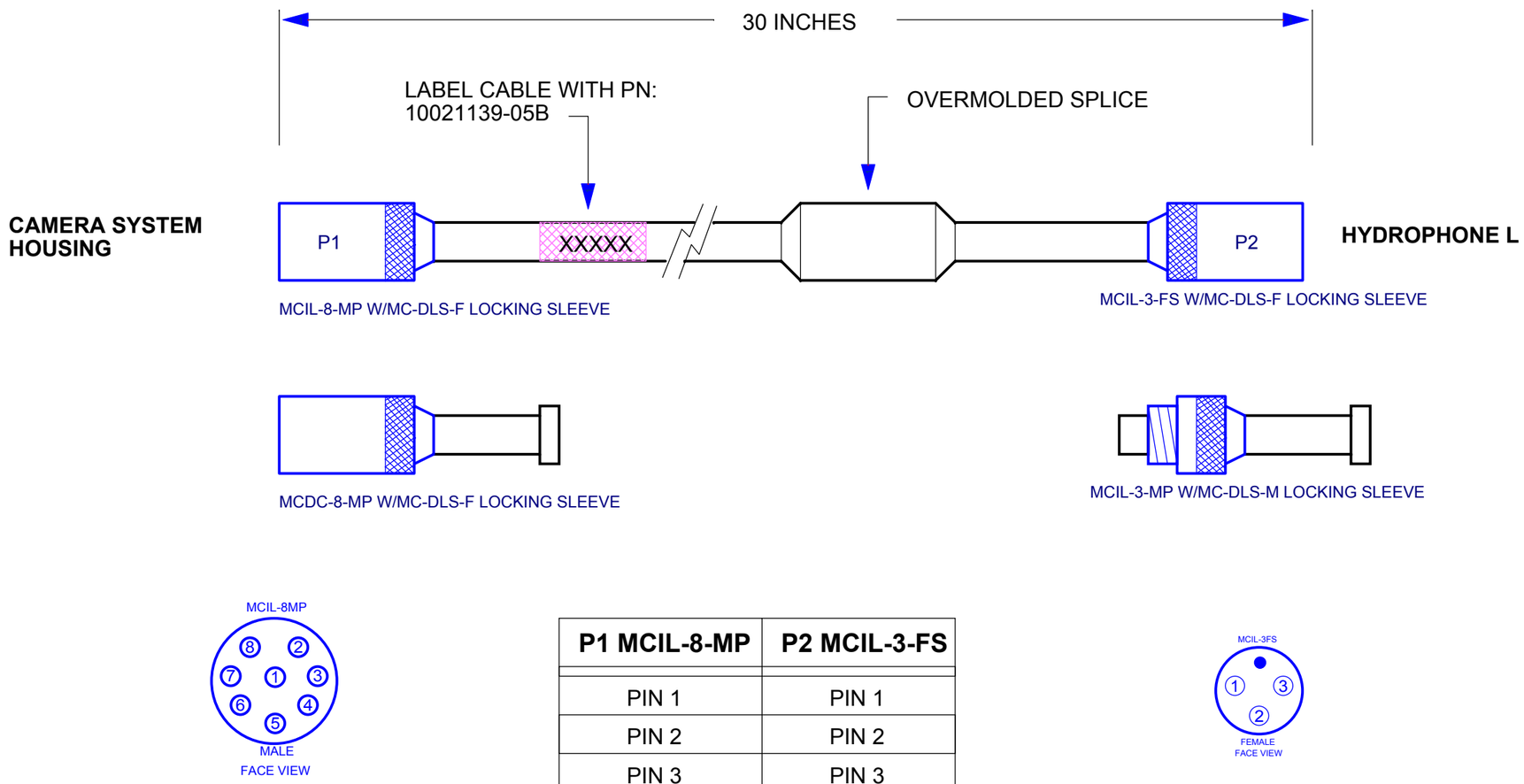

P1 MCIL-8-MP	P2 MCIL-3-FS
PIN 1	PIN 1
PIN 2	PIN 2
PIN 3	PIN 3
PIN 4	-- --
PIN 5	-- --
PIN 6	-- --
PIN 7	-- --
PIN 8	-- --

MBARI PN 10021139-05X

REVISION HISTORY:

REV. A 08JAN15 - FIRST RELEASE
REV. B 13JAN15 - ADDED SECOND HYDROPHONE

MONTEREY BAY AQUARIUM RESEARCH INSTITUTE
7700 SANDHOLDT ROAD
MOSS LANDING, CA 95039
PHONE (831) 775-1700 www.mbari.org
COPYRIGHT © 2014 MBARI
MAY NOT BE COPIED WITHOUT PERMISSION

M B A R I

Title			
	i2MAP TEMPORARY HYDROPHONE CABLE		
Size: C	Engineer: Mark Chaffey, EMAIL: chma@mbari.org (831) 775-1708	Number: 10021139-05-X	Rev: X
	Date: Monday, June 01, 2015	Filename: 901209_i2map_systemdesign.dsn	Sheet 5 of 18