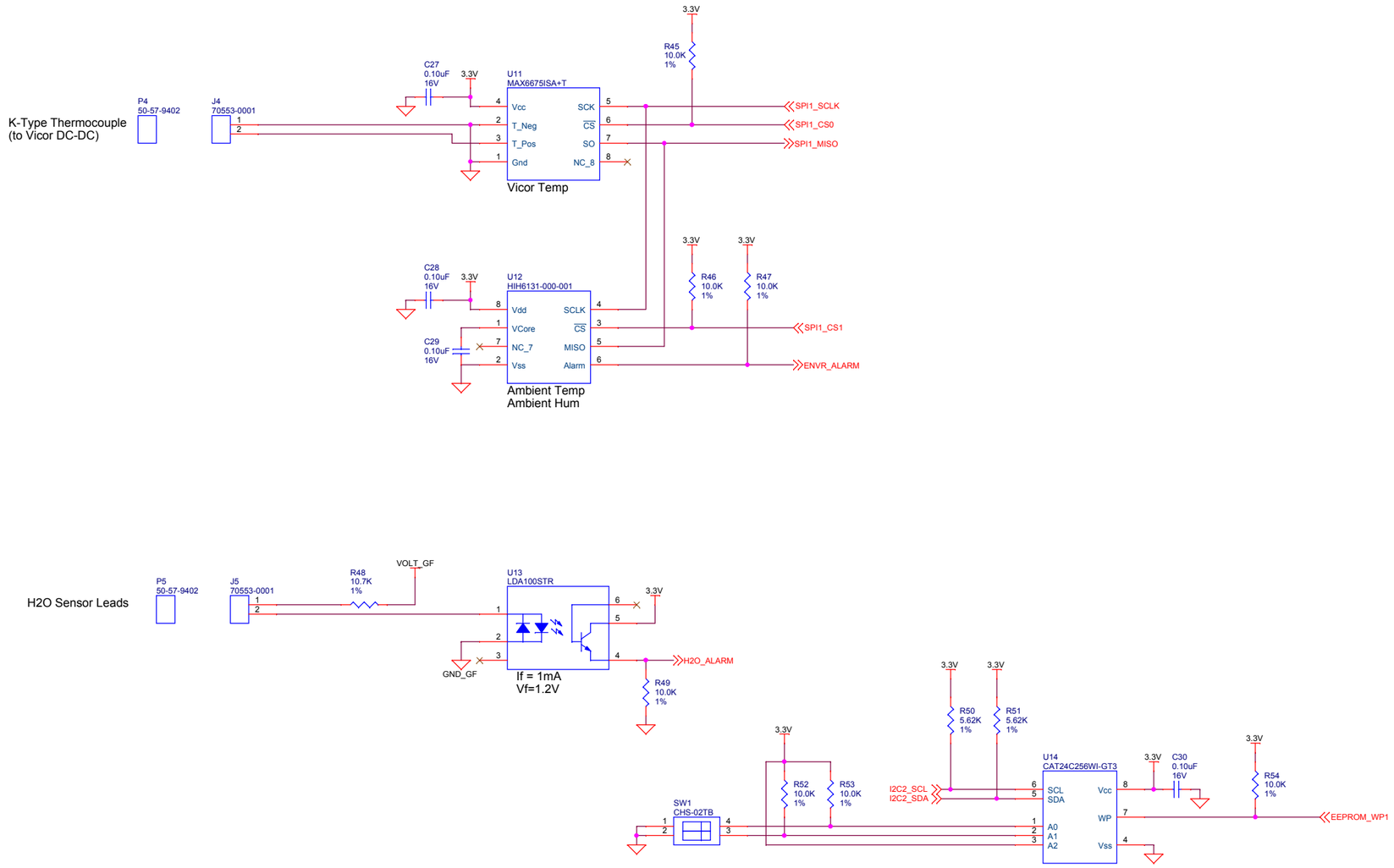

MONTEREY BAY AQUARIUM RESEARCH INSTITUTE
7700 SANDHOLDT ROAD
MOSS LANDING, CA 95039
(831) 775-1700 www.mbari.org

Copyright MBARI 2000

Title: Gateway Node GF & Envr Cape			Number: <Doc>
Size: C	Engineer: Chad Kecy	Layout: <Layout Eng.>	Filename: <Filename>	Rev: C
	Date: Friday, February 28, 2014	Sheet 2 of 14	