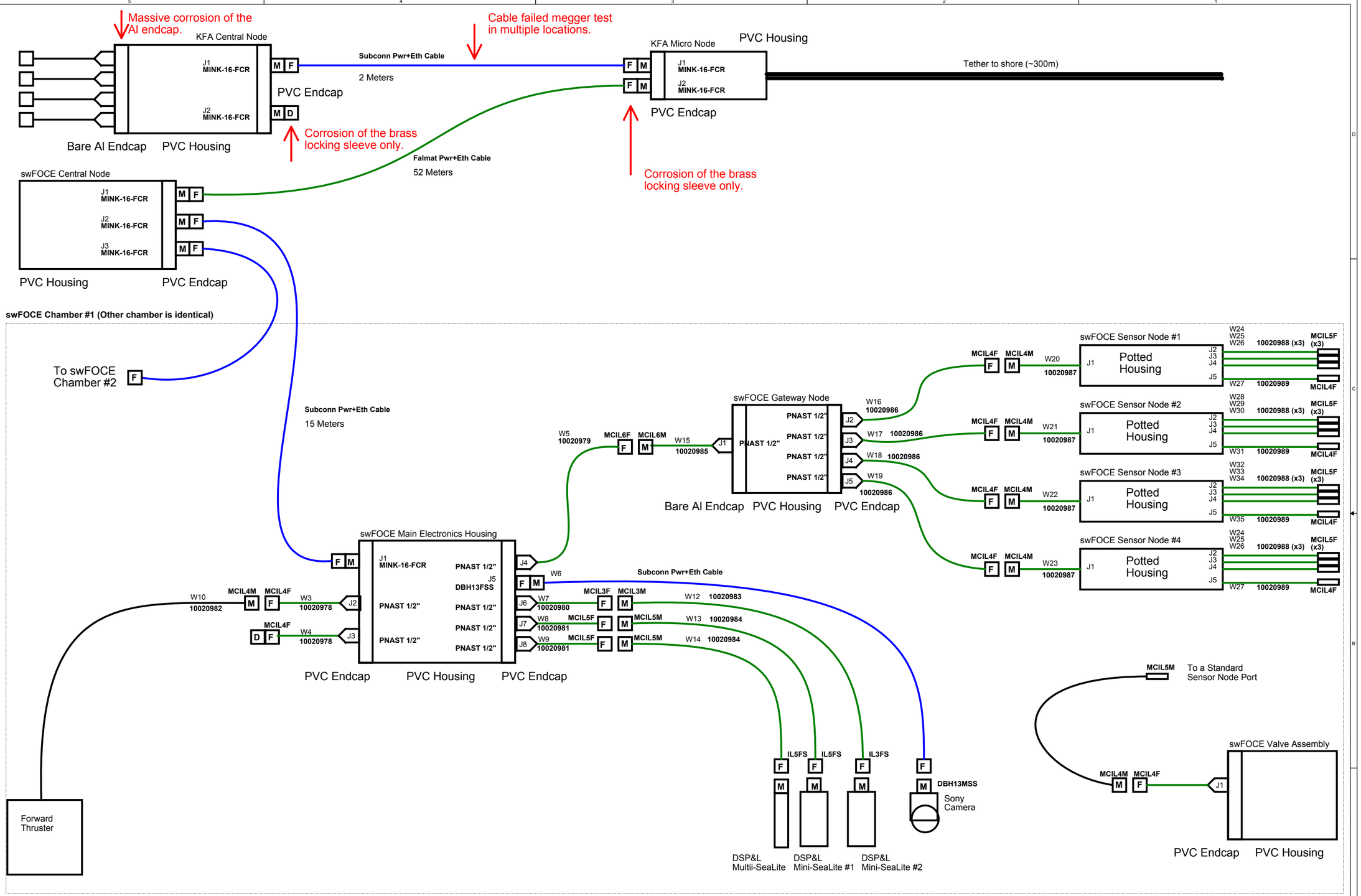

FM022208-03
XtremeNet
2pr-24AWG Tpr, 2-18AWG

MONTEREY BAY AQUARIUM RESEARCH INSTITUTE
7700 SANDHOLDT ROAD
MOSS LANDING, CA 95039
(831) 775-1700 www.mbari.org

Copyright MBARI 2000

Title: swFOCE System Level Connector Diagram			Number: <Doc>
Size: C	Engineer: Chad Kecy	Layout: <Layout Eng.>	Filename: <Filename>	Rev: B
	Date: Monday, July 20, 2015	Sheet 1 of 1	