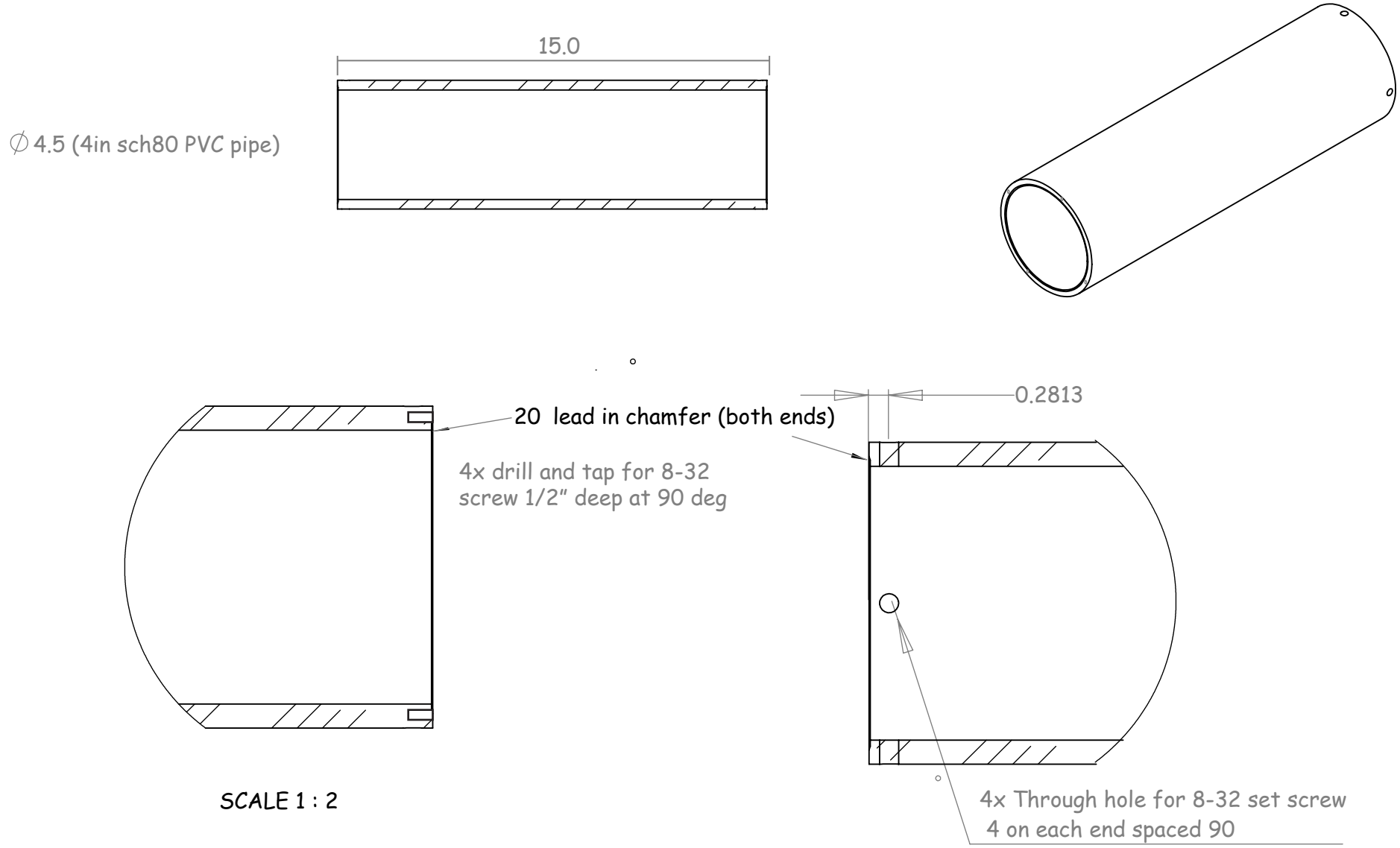

SCALE 1 : 2

Remove all sharp edges

Make (2)ea

Checked		UNLESS OTHERWISE SPECIFIED DIMENSIONS ARE IN INCHES	CAD GENERATED DRAWING, DO NOT MANUALLY UPDATE
Approved		MATERIAL 4in Sch80 Pipe	Drawn Brock Woodson (bwoodson@stanford.edu)
MFG		Units INCHES	Phone (404)307-5331
NEXT ASSY	USED ON		
APPLICATION		Scale 1:5	Date 3/9/11

Stanford University

Micronode Pressure Case

Main Node, Kelp Climate Lab

1 of 2

SIZE	Revision Date	REV.
A	3/9/11	
SCALE	CAD FILE:	SHEET OF