SubConn® Micro Series 4 Contacts

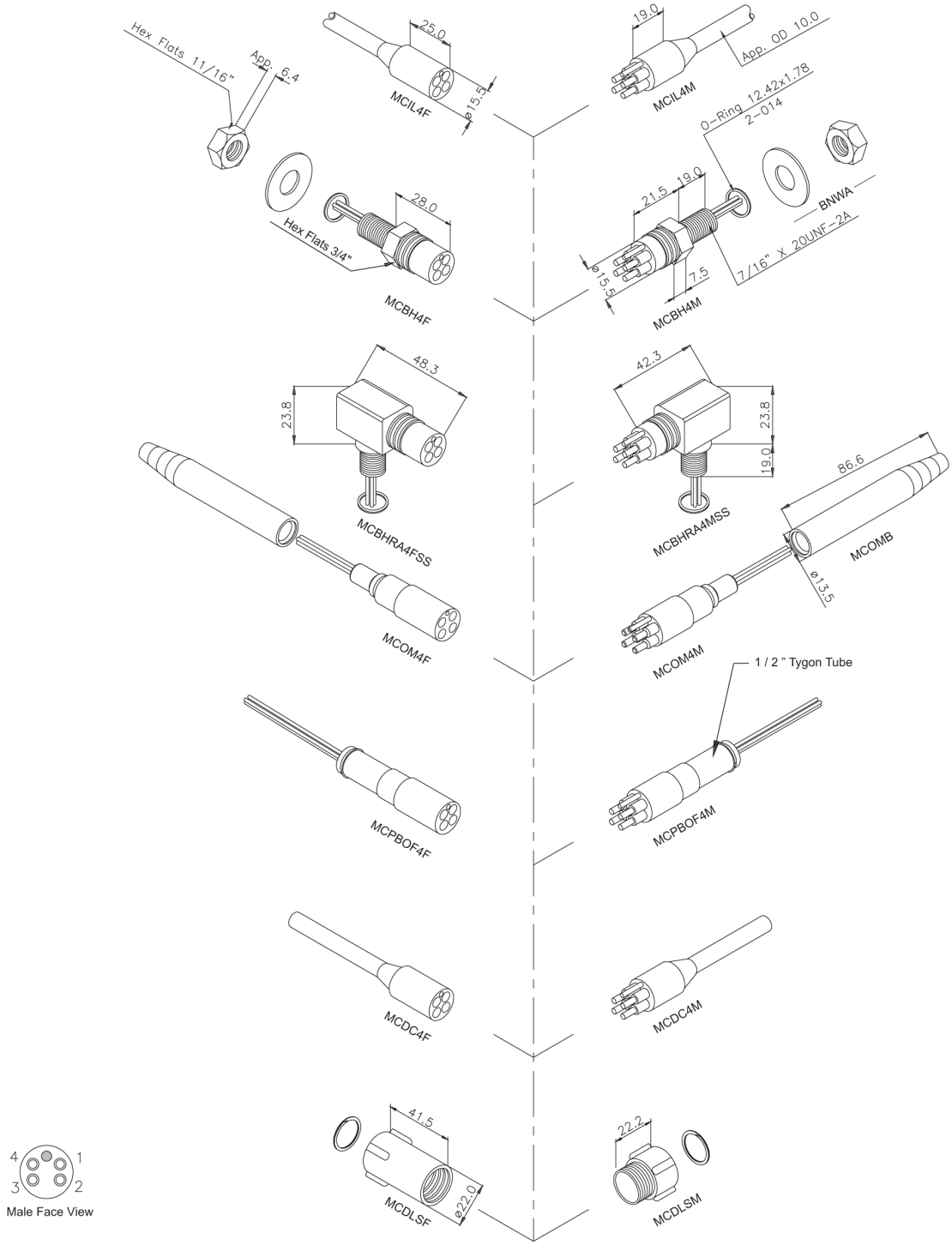

Inline Cable Colour Code

1 Black
2 White
3 Red
4 Green

(Bulkhead Leads Number Tagged)

Connector Specifications

Single Contact Rating	: 300 V @ 10 Amp
Connector Rating 2 pins	: 300 V @ 10 Amp
Connector Rating 3-4 pins	: 300 V @ 6 Amp
Insulation Resistance	: >200 megaohm
Contact Resistance	: <0,01 ohm
Wet Matings	: >500
Temp. Rating	: -4° to +60° C 25° to 140° F
Depth Rating	: 700 bar - 10.000 psi

Material Specifications

Connector Body	: Neoprene (CR)
Bulkhead Body	: Brass UNS-C36000
Contacts	: Brass UNS-C36000
Nuts & Washers	: Brass UNS-C36000
Location pin	: AISI 303
'O' Rings	: Nitrile
Locking Sleeve	: Delrin
Snap Ring	: AISI 302
Inline Cable (60 cm)	: 18 AWG 1,0 mm^2 Rubber
BH Leads (30 cm)	: 20 AWG 0,5 mm^2 Teflon
Options	: See index pages

Dimensions in mm.
Threads in inches.
1 inch = 25,4 mm.
1 mm = 0,03937 inch.

Modification rights reserved

Drawing No.
SE 300-53

11-08