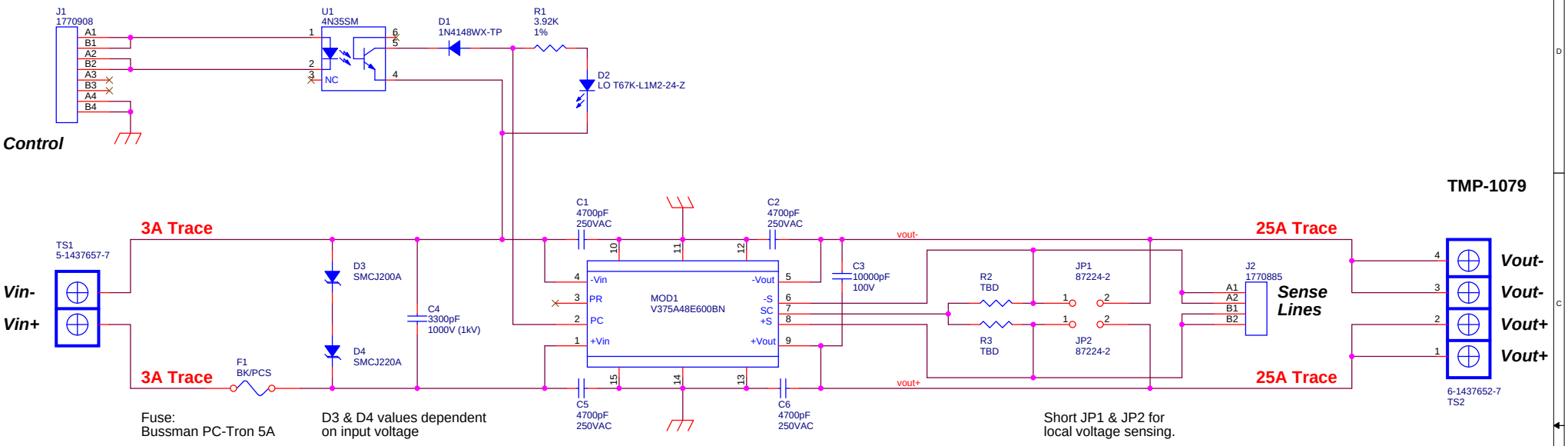

Fuse:
Bussman PC-Tron 5A

D3 & D4 values dependent
on input voltage

Short JP1 & JP2 for
local voltage sensing.

SurfMate Mounting for
Vicor Maxi

MONTEREY BAY AQUARIUM RESEARCH INSTITUTE
7700 SANDHOLDT ROAD
MOSS LANDING, CA 95039
(831) 775-1700 www.mbari.org

Copyright MBARI 2000

Title: Vicor Maxi Carrier Board			Number: <Doc>
Size: B	Engineer: Chad Kecy	Layout: <Layout Eng.>	Filename: <Filename>
	Date: Monday, April 08, 2013	Sheet 1 of 1	Rev: C