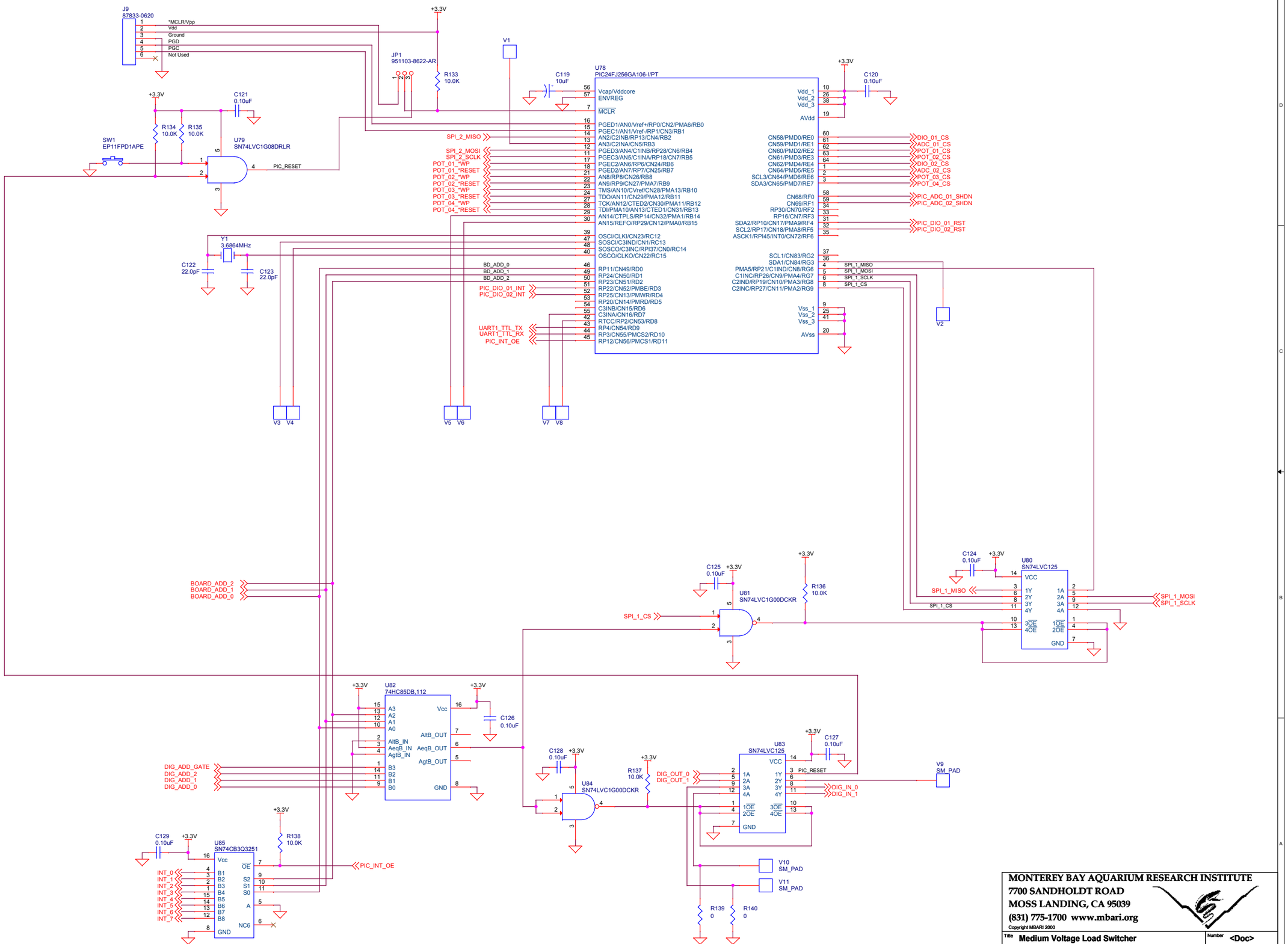

MONTEREY BAY AQUARIUM RESEARCH INSTITUTE
7700 SANDHOLDT ROAD
MOSS LANDING, CA 95039
(831) 775-1700 www.mbari.org

Copyright MBARI 2000

Title: Medium Voltage Load Switcher			Number: <Doc>
Size: C	Engineer: Chad Kecy	Layout: <Layout Eng.>	Filename: <Filename>
	Date: Monday, August 15, 2011	Sheet 6 of 7	Rev: B