THE INFORMATION CONTAINED IN THIS DRAWING IS THE SOLE PROPERTY OF MBARI. ANY REPRODUCTION IN PART OR WHOLE WITHOUT THE WRITTEN PERMISSION OF MBARI IS PROHIBITED.

REV	DESCRIPTION	DATE	APPROVED
A	INITIAL RELEASE	03/24/09	JS

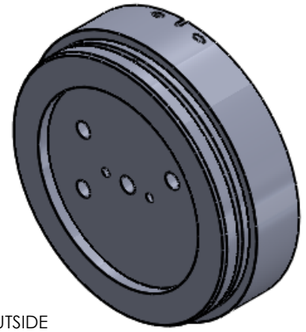

OUTSIDE

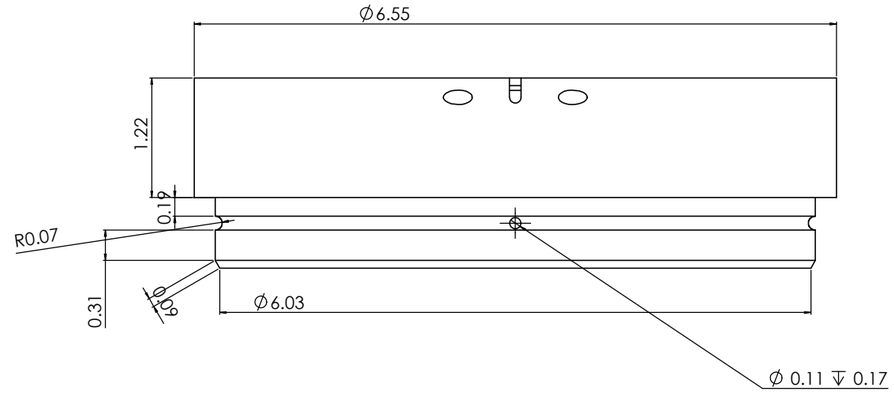

MATERIAL IS TO BE BLACK DELRIN

THIS DIMENSION WILL BE EITHER THE LISTED VALUE (.67), OR 6.67. PLEASE ESTIMATE BOTH COSTS.

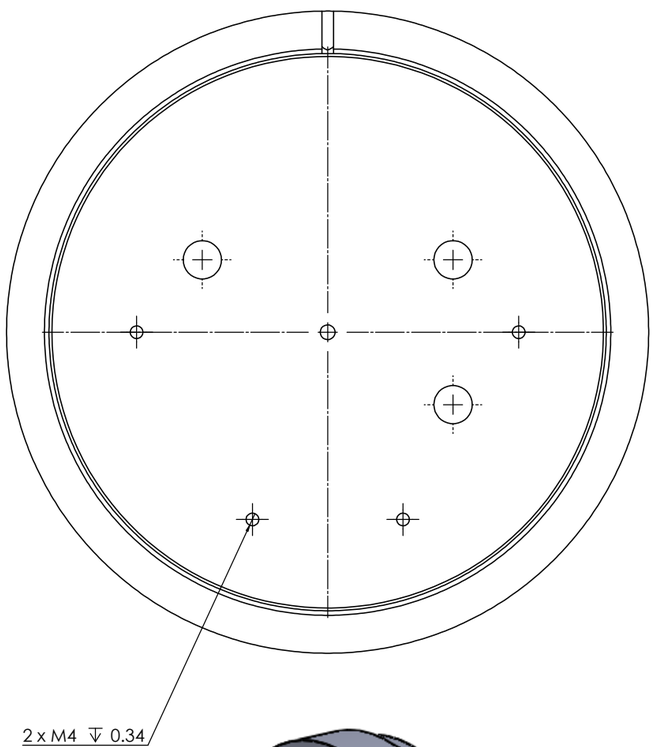

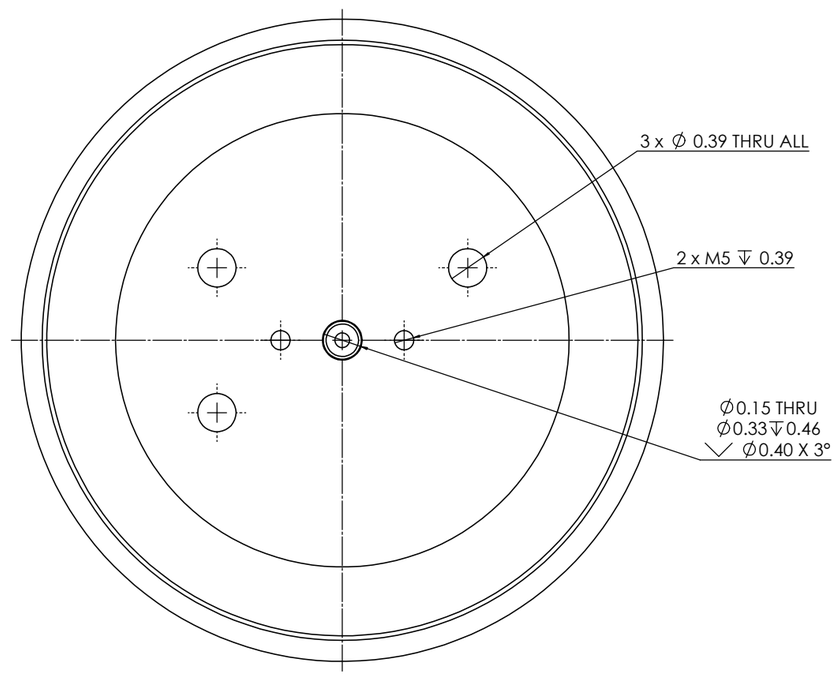

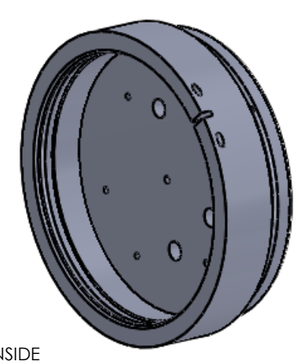

INSIDE

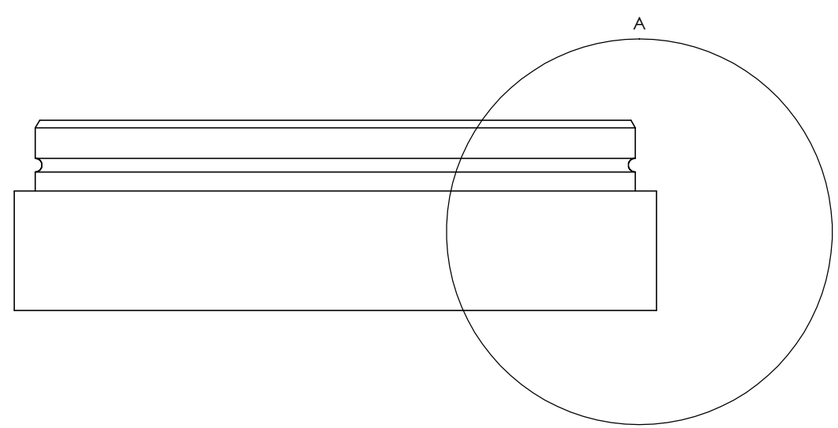

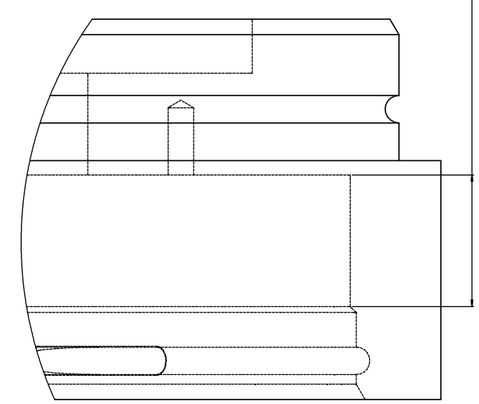

DETAIL A
SCALE 4 : 1

NOTES:
1. (FROM TITLE BLOCK)

REV. NO.	DATE	PART NO.	DESCRIPTION	DRAWN	MATERIAL SPECIFICATION

BILL OF MATERIALS

SHOP / S.C.	UNLESS OTHERWISE SPECIFIED TOLERANCES ARE:		
SURFACE	±.1	±.2	±.5
TOP FINISH	1. DIMENSIONS ARE IN INCHES 2. DEBURR/DEG. LIMITS HEAT AFTER PLATING 3. REMOVE BURRS, HOLD SHARP EDGES .015 MAX. 4. SANDTHREE PILOT RIVOR .010-.020		
BOTTOM FINISH	5. DIMENSIONS APPLY AFTER PLATING UNLESS OTHERWISE SPECIFIED. MATERIAL STATE		
DRAWING	6. PERFORMED CLEANTY & PREPARED FOR PAINTING PER MBARI SPEC. 7. PAINT PER MBARI SPEC.		
NEXT ASSY. USED ON/TO	NEXT ASSY. REQUIRED		
APPLICATION	DO NOT SCALE DRAWING		

DRAWN BY: JS
CHECKED BY: XX/XX/XX
ENGINEER: XX/XX/XX
MANUFACTURING:
PROJECT LEAD: XXXXXXXXX
PROJECT: XXXXXXXXX
GROUP: N/A

Monterey Bay Aquarium Research Institute
MBARI
7700 Sandholdt RD.
Moss Landing, CA 95039
PH: (831) 775-1700

Towbodyfindcap(Part95)

SIZE	DWG. NO.	REV
A	.DWG	

SCALE: 1:1 | SHEET 1 OF 1 | DO NOT SCALE DRAWING | MASS: | LOT: