REVISIONS			
REV.	DESCRIPTION	REV BY	DATE
A	RELEASE TO PRODUCTION NO CHANGES FROM REV 02	HBD	9/11/2013

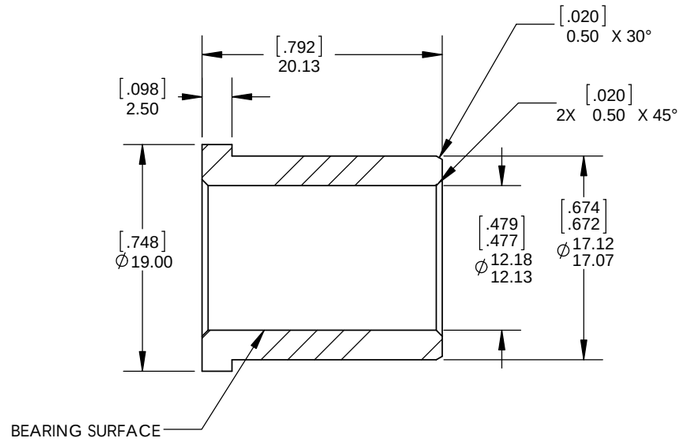

SECTION A-A

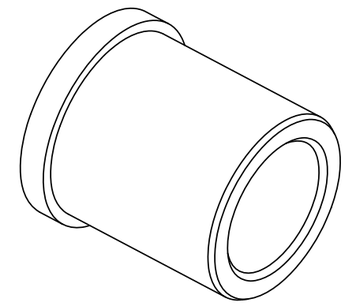

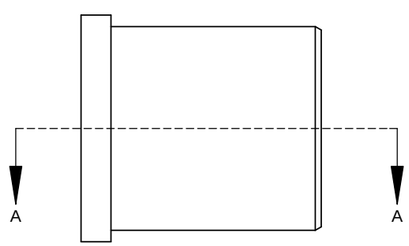

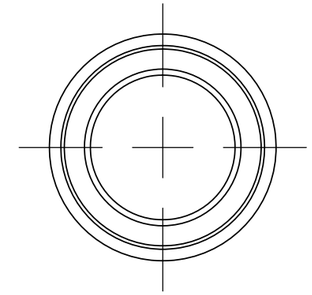

NOTES: (UNLESS OTHERWISE SPECIFIED)

1. REMOVE ALL BURRS, BREAK ALL SHARP EDGES AND CORNERS.
2. COMPUTER GENERATED FILE, 05278_REV_A, REPRESENTS NOMINAL CONDITION OF ALL GEOMETRY. TOLERANCE OF NON-DIMENSIONED GEOMETRY IS AS FOLLOWS:
   SURFACES: ⌓ 0.25 FLAT SURFACES: ⏥ 0.13 STRAIGHT EDGES: — 0.25
   CONTACT LIQUID ROBOTICS PURCHASING TO OBTAIN FILE
3. INTERPRET DRAWING PER ASME Y14.100-2004.
4. ALL DIMENSIONS APPLY AFTER FINISH.

UNLESS OTHERWISE SPECIFIED:
DIMENSIONS ARE IN MM [INCH]
TOLERANCES:
X.X: ± 0.25 [0.010]
X.XX: ± 0.13 [0.005]
ANGULAR: ± 1°

MATERIAL
ULTRAFLON F20

FINISH
AS MACHINED

DO NOT SCALE DRAWING

	NAME	DATE
DRAWN	H. DORN	8/7/2013
CHECKED	S. AUROUSSEAU	9/11/2013
ENG APPR.	T. ONG	9/11/2013
MFG APPR	T. DANG	9/11/2013

PROPRIETARY AND CONFIDENTIAL
THE INFORMATION CONTAINED IN THIS DRAWING IS THE SOLE PROPERTY OF LIQUID ROBOTICS. ANY REPRODUCTION IN PART OR AS A WHOLE WITHOUT THE WRITTEN PERMISSION OF LIQUID ROBOTICS IS PROHIBITED.

DO NOT SCALE DRAWING

TITLE:
BEARING, ROLL, ULTRAFLON F20

SIZE **B** | DWG. NO. 05278 | REV A

SCALE: 2:1 | STATUS: PROTOTYPE | SHEET 1 OF 1