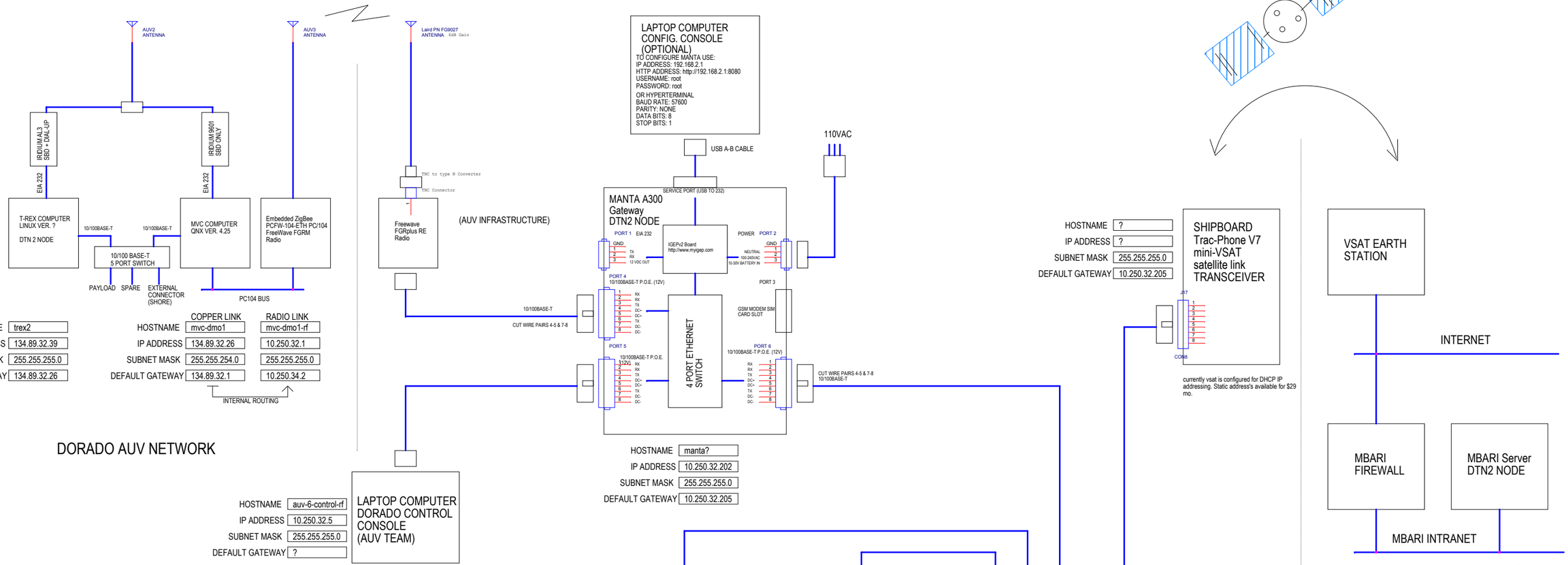

MONTEREY BAY AQUARIUM RESEARCH INSTITUTE
7700 SANDHOLDT ROAD
MOSS LANDING, CA 95039
PHONE (831) 775-1700 www.mbari.org

COPYRIGHT © 2012 MBARI
MAY NOT BE COPIED WITHOUT PERMISSION

Title: **DTN FIELD TEST NETWORK**

Size	Engineer:	Number	Rev
D	Mark Chaffey & Tom O'Reilly, EMAIL: chmw@mbari.org (831) 775-1708	10020806-SCH-C	C
	Date: Thursday, May 03, 2012	Filename: DTN_Field_Test.dsn	Sheet 1 of 1