DAT-900 Series Directional Acoustic Transponders

User's Manual

P/N M-270-28, Rev. A

EXPORT CONTROLLED - ITAR RESTRICTED

Information included herein is considered technical data as defined in 22 CFR 120.10 of the International Traffic in Arms Regulations (ITAR), and is subject to export control laws of the U.S. Government. Transfer of this data to a foreign person, whether in the U.S. or abroad, requires U.S. Department of State approval.

Teledyne Benthos, Inc.
49 Edgerton Drive
North Falmouth, MA 02556
U.S.A.
Tel: +1 (508) 563-1000
Fax: +1 (508) 563-6444

www.benthos.com

Notices

Proprietary Information

The information, descriptions, photos and illustrations in this manual are the property of Teledyne Benthos, Inc. Materials may not be reproduced or disseminated without the prior written consent of Teledyne Benthos.

Warranty and Intellectual Property Rights Statement

This Statement applies to Teledyne Benthos, Inc. products, including Teledyne TapTone products. Approved 3/27/06.

LIMITED WARRANTY. Teledyne Benthos, Inc. warrants that the products sold hereunder shall be free from defects in materials and workmanship under normal use and service when correctly installed, used and maintained for a period of one (1) year from date of shipment from Teledyne Benthos, Inc. Purchaser's receipt of any product delivered hereunder shall be an unqualified acceptance of and a waiver by Purchaser of the right of Purchaser to make a claim with respect to such product unless Purchaser gives Teledyne Benthos, Inc. notice of any claim within one (1) year after shipment from Teledyne Benthos, Inc. of such product. This warranty is limited to repair or replacement of the said product in the sole discretion of Teledyne Benthos, Inc., when at the Teledyne Benthos, Inc. plant in North Falmouth, Massachusetts, all freight and insurance prepaid, providing the product was not abused or operated other than in accordance with the Teledyne Benthos, Inc. instruction manuals. With respect to the sale of Teledyne Benthos, Inc. oceanographic instruments which are pressure tested to rated depth prior to shipment, Teledyne Benthos, Inc. does not assume responsibility for any damage due to leakage or implosion. Teledyne Benthos, Inc. reserves the right to modify its warranty at any time, in its sole discretion. THIS LIMITED WARRANTY IS NOT TRANSFERABLE FROM THE ORIGINAL PURCHASER.

LIMITATION OF LIABILITY. TELEDYNE BENTHOS, INC. MAKES NO OTHER WARRANTY REGARDING ITS PRODUCTS OR THE PRODUCTS OF OTHERS EITHER EXPRESS OR IMPLIED, AND, ANY IMPLIED WARRANTY OF MERCHANTABILITY OR FITNESS FOR A PARTICULAR PURPOSE WHICH EXCEEDS THE FORGOING WARRANTIES IS HEREBY DISCLAIMED BY TELEDYNE BENTHOS, INC. AND EXCLUDED FROM ANY AGREEMENT MADE BY ACCEPTANCE OF ANY ORDER.

TELEDYNE BENTHOS, INC. DOES NOT ACCEPT LIABILITY BEYOND THE REMEDIES SET FORTH HEREIN AND DOES NOT ACCEPT ANY LIABILITY FOR: PRODUCTS NOT BEING AVAILABLE FOR USE, LOST OR CORRUPTED DATA, LOSS OF BUSINESS, LOSS OF PROFITS, LOSS OF USE OF THE PRODUCT OR ANY ASSOCIATED EQUIPMENT, COST OF CAPITAL, COST OF SUBSTITUTE OR REPLACEMENT PRODUCT, FACILITIES OR SERVICES, DOWN-TIME, CHARGES FOR PURCHASER'S TIME AND EFFORT, THE CLAIMS OF THIRD PARTIES, INJURY TO PROPERTY, OR ANY OTHER DIRECT, INDIRECT, SPECIAL, RELIANCE, INCIDENTAL OR CONSEQUENTIAL OR ADMINISTRATIVE DAMAGES, REGARDLESS OF THE NATURE OF THE CLAIM AND WHETHER OR NOT FORESEEABLE AND WHETHER OR NOT BASED ON THE LEGAL THEORIES OF BREACH OF WARRANTY, CONTRACT, TORT (INCLUDING NEGLIGENCE), OR STRICT LIABILITY, EVEN IF TELEDYNE BENTHOS, INC. HAS BEEN ADVISED OF THE POSSIBILITY OF SUCH DAMAGES, OR FOR ANY CLAIM BY ANY THIRD PARTY, EXCEPT AS EXPRESSLY PROVIDED HEREIN. THIS LIMITATION OF LIABILITY APPLIES BOTH TO PRODUCTS AND SERVICES AND SUPPORT PROVIDED PURCHASER UNDER THIS AGREEMENT. NO ORAL OR WRITTEN INFORMATION OR ADVICE GIVEN BY TELEDYNE BENTHOS, INC., ITS AGENTS OR EMPLOYEES SHALL CREATE A WARRANTY OR IN ANY WAY INCREASE THE SCOPE OF THIS LIMITED WARRANTY. ANY AND ALL LIABILITY OF TELEDYNE BENTHOS, INC. IS EXPRESSLY LIMITED TO THE PRICE PURCHASER HAS PAID FOR THE PRODUCT. PURCHASER'S SOLE REMEDY AGAINST TELEDYNE BENTHOS, INC. IN ANY DISPUTE UNDER THIS AGREEMENT SHALL BE TO SEEK RECOVERY OF THE AMOUNTS PURCHASER PAID, PURSUANT TO THE LIMITED WARRANTY PROVIDED ABOVE, UPON THE PAYMENT OF WHICH TELEDYNE BENTHOS, INC., ITS AGENTS, OFFICERS, DIRECTORS, EMPLOYEES, AND AFFILIATES, WILL BE RELEASED FROM AND DISCHARGED OF ALL FURTHER OBLIGATIONS AND LIABILITY TO PURCHASER.

THE LIMITED WARRANTY OF TELEDYNE BENTHOS, INC. GIVES PURCHASER SPECIFIC LEGAL RIGHTS, AND PURCHASER MAY ALSO HAVE OTHER RIGHTS THAT VARY FROM STATE TO STATE. SOME STATES DO NOT ALLOW LIMITATIONS ON HOW LONG AN IMPLIED WARRANTY LASTS OR THE EXCLUSION OR LIMITATION OF INCIDENTAL OR CONSEQUENTIAL DAMAGES, SO THE ABOVE LIMITATIONS OR EXCLUSIONS MAY NOT APPLY TO PURCHASER.

INTELLECTUAL PROPERTY RIGHTS. No rights in Intellectual property, including but not limited to, license or other rights under any patent, copyrights, trade secrets, or trademarks owned or controlled by Teledyne Benthos, Inc. or under which Teledyne Benthos, Inc. is licensed, are granted to Purchaser or implied by the sale of products or services hereunder. Purchaser shall not identify as genuine products of Teledyne Benthos, Inc. any Teledyne Benthos, Inc. products purchased hereunder which Purchaser has treated, modified, or altered in any way. Purchaser shall not use the trademarks of Teledyne Benthos, Inc. to identify such products, provided however, that Purchaser may identify such products as utilizing, containing, or having been manufactured from genuine products of Teledyne Benthos, Inc. as treated, modified, or altered by Purchaser or a representative of Purchaser. If products or services sold hereunder are manufactured according to the specifications of Purchaser, Purchaser shall indemnify Teledyne Benthos, Inc. against any liability for patent, copyright, or trademark infringement on account of such manufacture or performance.

Liability

Teledyne Benthos assumes no liability for damages, losses or costs incurred consequentially through operation or malfunction of Teledyne Benthos products.

Title

Title shall pass to the Buyer on delivery to the carrier at North Falmouth, Massachusetts, U.S.A. Risk of damage or loss following such delivery shall be the Buyer's, and Teledyne Benthos shall in no way be responsible for safe arrival of the shipment. Title shall so pass to the Buyer regardless of any provision for payment of freight or insurance by Teledyne Benthos, and regardless of the form of the shipping documents. If shipment is consigned to Teledyne Benthos, it shall be for the purpose of securing the Buyer's obligations under contract.

Changes

Teledyne Benthos reserves the right to make changes to the design or specifications at any time without incurring any obligation to modify previously installed units. In addition, while considerable effort has been made to ensure that the information in this manual is accurate and complete, Teledyne Benthos assumes no liability for any errors or omissions.

Preface

Congratulations on your purchase of a Teledyne Benthos DAT-900 Series Directional Acoustic Transponder! The DAT-900 Series Directional Acoustic Transponder, which employs the latest in digital signal processing technologies, is the most advanced underwater transponder available.

This manual provides information on setting up, testing and operating the DAT-900 Series Directional Acoustic Transponder. It is divided into the following ten sections:

Section 1 - Overview describes how bearing and inclination are determined using ultra short baseline (USBL) acoustic positioning and describes the transponder and transducer types available.

Section 2 - Specifications lists the specifications for the transponders, the remote USBL transducers and the transponder battery packs.

Section 3 - Deployment Considerations reviews important installation considerations to ensure the best possible transponder performance.

Section 4 - Setup and Test provides instructions for unpacking and setting up the transponders.

Section 5 - Transponder Operation and Configuration provides descriptions of the transponder AT and CLAM shell commands and how to use them, descriptions of the transponder configuration parameters and how to set them, and instructions on how to configure the installed compass and load transducer calibration data.

Section 6 - Maintenance and Troubleshooting provides instructions for cleaning and inspecting the transponders, cleaning or replacing O-rings and troubleshooting operational problems that might occur.

Section 7 - Drawings includes outline drawings of the transponders to assist in their installation and setup.

Section 8 - Transponder Spares, Accessories and Part Designator Includes lists of spares and accessories for the transponders along with a part designator for simplified ordering.

Notes and Warnings

Where applicable, special notes and warnings are presented as follows:

NOTE A referral to another part of this manual or to another reference; a recommendation to check that certain criteria are met before proceeding further in a step or sequence; or general information applicable to the setup and operation of the Teledyne Benthos transponders.

WARNING A reminder that dangerous or damaging consequences could result if certain recommended procedures are not followed.

Customer Service

We welcome your comments and suggestions for improving our products and documentation as well as developing better ways of serving you with acoustic technology. Therefore, please contact Customer Service should you have any comments or suggestions about this manual or the Teledyne Benthos transponders, or if you require service or support.

Please contact us at:

TELEDYNE BENTHOS, INC.
Attention: Customer Service
49 Edgerton Drive
North Falmouth, MA 02556
U.S.A.

Telephone: +1 (508) 563-1000
Fax: +1 (508) 563-6444
E-mail: benthos@teledyne.com

www.benthos.com

Contents

Notices ii
Proprietary Information ii
Warranty and Intellectual Property Rights Statement ii
Liability iv
Title iv
Changes iv
Preface v
Notes and Warnings vi
Customer Service vi
Contents vii
List of Figures xi
List of Tables xiii

1 Overview 1-1

Determining Bearing and Inclination 1-1
Ultra Short Baseline Acoustic Positioning 1-1
Frames of Reference 1-2
Chirp 1-4
Transponder and Remote Transducer Types 1-4
Subsea Transponders 1-5
DAT-915 and DAT-914 Directional Acoustic Transponders . . . 1-6
DAT-916 Directional Acoustic Transponder 1-6
DAT-925 and DAT-924 Directional Acoustic Transponders . . . 1-7
DAT-926 Directional Acoustic Transponder 1-7
DAT-965 and DAT-964 Directional Acoustic Transponders . . . 1-8
DAT-966 Directional Acoustic Transponder 1-8
Transponder Board Sets 1-9
DAT-903 and DAT-900 Transponder Board Set 1-9
DAT-993 and DAT-990 Transponder Board Set 1-10
Remote USBL Transducers 1-10

2 Specifications 2-1

General 2-1
Real-Time Clock 2-3
DAT-914 Transponder 2-3
DAT-915 Transponder 2-4
DAT-916 Transponder 2-5

DAT-924 Transponder 2-5
DAT-925 Transponder 2-6
DAT-926 Transponder 2-6
DAT-964 Transponder 2-7
DAT-965 Transponder 2-7
DAT-966 Transponder 2-8
DAT-900 Transponder Board Set 2-8
DAT-903 Transponder Board Set 2-9
DAT-990 Transponder Board Set 2-9
DAT-993 Transponder Board Set 2-9
Remote USBL Transducer 2-10
Transponder Battery Pack Capacities 2-10
Transponder Battery Pack Capacity for DAT-914/915/924/925 Directional Acoustic Transponders 2-11
Transponder Battery Pack Capacity for DAT-964/965 Directional Acoustic Transponders 2-11

3 Deployment Considerations 3-1

Multipath and Noise 3-1
USBL Transducer Orientation and Mounting 3-1
Transducer Up/Down Orientation 3-2
Transducer Rotation 3-3
Use of an Acoustic Baffle 3-3
Height Above the Bottom and Distance Below the Surface 3-3
Other Acoustic Devices 3-4
Typical Deployment Configurations 3-4
Transponder Deployment 3-4
Corrosion Protection 3-5
O-Ring Inspection 3-5

4 Setup and Test 4-1

Unpacking and Inspection 4-1
DAT-914 Components 4-1
DAT-915 Components 4-2
DAT-916 Components 4-2
DAT-924 Components 4-2
DAT-925 Components 4-3
DAT-926 Components 4-3
DAT-964 Components 4-3

DAT-965 Components 4-4
DAT-966 Components 4-4
DAT-900 Components 4-4
DAT-990 Components 4-5
DAT-903 Components 4-5
DAT-993 Components 4-6
Transponder Connections 4-6
Transponder Operator Functions 4-6
Acoustic Zero 4-7
Setting Up the Transponders and Board Sets 4-7
Setting up the Transponders 4-8
Setting up the DAT-900, DAT-990, DAT-903, and DAT-993 Board Sets 4-11
Setting up the Host Processor 4-17

5 Transponder Operation and Configuration 5-1

Transponder Commands 5-1
Transponder AT Commands 5-1
Bearing and Inclination . . . . . **ATRn** 5-3
Azimuth and Elevation . . . . . **ATRRn** 5-5
Compass and Tilt . . . . . **ATRCn** 5-7
Pitch and Roll . . . . . **ATRTn** 5-9
Bearing . . . . . **ATRAHn** 5-11
Inclination . . . . . **ATRAIn** 5-13
Azimuth . . . . . **ATRRHn** 5-15
Elevation . . . . . **ATRREn** 5-17
Compass . . . . . **ATRCHn** 5-19
Pitch . . . . . **ATRCPn** 5-21
Roll . . . . . **ATRCRn** 5-23
Transponder CLAM Shell Commands 5-25
oneway 5-25
dat 5-25
Configuration Parameters 5-28
Configuring the Compass 5-40
Calibrating the USBL Transducer 5-41

6 Maintenance and Troubleshooting 6-1
General Cleaning and Inspection 6-1
Cleaning or Replacing an O-ring 6-2
Troubleshooting 6-4

7 Drawings 7-1
Subsea Transponders 7-1
Transponder Board Sets 7-1
Remote USBL Transducers 7-1

8 Transponder Spares, Accessories and Part Number Designator 8-1
Transponder Spares and Accessories 8-1
Transponder Part Number Designation 8-2

List of Figures

Figure 1-1 *Comparing Vehicle Frame of Reference Azimuth and Elevation to World Frame of Reference Bearing and Inclination* 1-3

Figure 1-2 *The DAT-915 Directional Acoustic Transponder (Shown with LF Transducer)* 1-6

Figure 1-3 *The DAT-916 Directional Acoustic Transponder (Shown with MF/BC Transducer)* 1-6

Figure 1-4 *The DAT-925 Directional Acoustic Transponder (Shown with MF/BC Transducer)* 1-7

Figure 1-5 *The DAT-926 Directional Acoustic Transponder (Shown with LF Transducer)* 1-7

Figure 1-6 *The DAT-965 Directional Acoustic Transponder (Shown with MF/BC Transducer)* 1-8

Figure 1-7 *The DAT-966 Directional Acoustic Transponder (Shown with MF/BC Transducer)* 1-8

Figure 1-8 *The DAT-903 Transponder Board Set* 1-9

Figure 1-9 *The DAT-993 Transponder Board Set* 1-10

Figure 3-1 *Transducer Up and Down Orientations (Transducer Frame)* 3-2

Figure 3-2 *Transducer Rotated from Physical Zero* 3-3

Figure 4-1 *Transponder On/Off Switch* 4-7

Figure 4-2 *Remote USBL Transducer Acoustic Zero* 4-7

Figure 4-3 *Transponder POWER/SERIAL Connector, Face View* . . . 4-8

Figure 4-4 *DSP Board Serial Connector J7, Face View* 4-11

Figure 4-5 *DSP Board Serial Connector J8, Face View* 4-11

Figure 4-6 *DAT-903 and DAT-993 Board Set Transducer Connection Cable Pigtails* 4-15

Figure 4-7 *DAT-900, DAT-990, DAT-903, and DAT-993 I/O Connector J3, Face View* 4-16

Figure 5-1 *List of Configuration Parameters for the Dat Section of the Standard.ini File* 5-28

Figure 5-2 List of Configuration Parameters for the Serial Section of the Standard.ini File 5-40

Figure 5-3 Example Compass Output Data 5-41

Figure 8-1 DAT-900 Series Part Number Designator Legend 8-3

List of Tables

Table 4-1 Transponder POWER/SERIAL Connector Pinouts 4-8

Table 4-2 Transponder POWER/SERIAL Connector to DB-9 Pin-to-Pin Connections 4-10

Table 4-3 DSP Board Serial Port 1 Connector J7 Pinouts 4-12

Table 4-4 DSP Board Serial Port 2 Connector J8 Pinouts 4-12

Table 4-5 Transmit/Receive Board Power Connector J3 Pinouts . . 4-13

Table 4-6 DSP Board Serial Port 1 Connector J7 to DB-9 Pin-to-Pin Connections 4-14

Table 4-7 DSP Board Serial Port 2 Connector J8 to DB-9 Pin-to-Pin Connections 4-14

Table 4-8 Remote USBL Transducer Cable Wiring 4-16

Table 4-9 DSP Board I/O Connector J3 Pinouts 4-17

Table 5-1 DAT-900 Series Directional Acoustic Transponders AT Command Set 5-2

Table 5-2 DAT-900 Series Directional Acoustic Transponder Configuration Parameters 5-29

Table 5-3 DatVerbose Configuration Parameter Output Data Field Selections 5-33

Table 8-1 DAT-910 Series Directional Acoustic Transponder Spares 8-1

Table 8-2 DAT-920 Series Directional Acoustic Transponder Spares 8-1

Table 8-3 DAT-960 Series Directional Acoustic Transponder Spares 8-2

Table 8-4 DAT-900 Series Directional Acoustic Transponder Spares 8-2

Table 8-5 Cables 8-2

1 Overview

The Teledyne Benthos DAT-900 Series Directional Acoustic Transponders perform all of the same functions and comply with the same environmental specifications as the Teledyne Benthos ATM-900 Series Acoustic Telemetry Modems but include the added ability to determine the direction from which a message is received over the acoustic link. This added feature is performed using the patented (WO 2007/084164 A2) form of wideband ultra short baseline (USBL) acoustic positioning methods.

NOTE This manual is intended for use along with the ATM-900 Series Acoustic Telemetry User's Manual, P/N M-270-26.

Determining Bearing and Inclination

Compared to the Teledyne Benthos ATM-900 Series Acoustic Telemetry Modems, the DAT-900 Series Directional Acoustic Transponders can additionally acquire and output the direction of arrival, composed of north referenced bearing and inclination, from the location of any modem. The inclination is referenced to a plane that is perpendicular to the axis of the transponder's transducer and is located at its top, and the bearing is referenced to an "acoustic zero" reference mark on the transducer.

NOTE Throughout this manual, "transponder" refers to a Teledyne Benthos DAT-900 Series Directional Acoustic Transponder only.

Ultra Short Baseline Acoustic Positioning

The DAT-900 Series Directional Acoustic Transponders use a USBL transducer for both communications and direction acquisition. For communications the transducer uses a combined single element transducer for both the transmit and receive functions. For direction acquisition it uses a separate multi-element transducer. The combined element transducer is similar to that used for an ATM-900 Series Acoustic Telemetry Modem. The phase difference in the received signals among the elements of the multi-element transducer determines the difference in arrival time of the signals and therefore the angle of arrival.

Frames of Reference

Determination of a correctly referenced bearing and inclination takes into account three frames of reference:

Transducer frame of reference. The acoustic zero of the USBL transducer defines the transducer frame of reference. The acoustic zero is clearly marked on the transducer or transponder housing. On a transponder housing the acoustic zero is the center of the on/off switch, and on a remote USBL transducer, the acoustic zero is marked with a "V." The switch is shown in Figure 4-1 on page 4-7, and the "V," in Figure 4-2. A transducer calibration data file is downloaded to each transponder and is applied directly to the transducer output signals in the transducer frame of reference. The contents of this file is unique for every transducer.

NOTE Each transponder has a unique calibration file that is associated with its USBL transducer. In cases where a *remote* USBL transducer is used, the calibration file for this transducer must be loaded onto the transponder it connects to. Refer to "Calibrating the USBL Transducer" on page 5-41 for instructions on how to load this file.

Vehicle frame of reference. The rotational position of the acoustic zero of the transducer to that of the vehicle to which it is mounted, and whether the transducer is pointed up or down, determines the orientation of the transducer with respect to the vehicle frame of reference. This relationship between the transducer frame of reference and the vehicle frame of reference is entered manually with a configuration parameter setting as an offset bearing to the transducer frame of reference along with a configuration parameter setting for the point up or point down orientation of the transducer. Directional parameters within the vehicle frame of reference are relative and are in terms of vehicle referenced azimuth and elevation. An example azimuth is shown in the upper half of Figure 1-1, and an elevation, in the lower half.

World frame of reference. Compensation for pitch, roll and rotation, in that order, are applied to the vehicle frame of reference to determine the orientation of the vehicle with respect to the world frame of reference. Because the measured angles will vary with the orientation of the transducer, pitch and roll inputs are required to compensate for changes in measured azimuth and elevation that are due to changes in attitude. If a north referenced bearing is also desired, a compass input must be used to

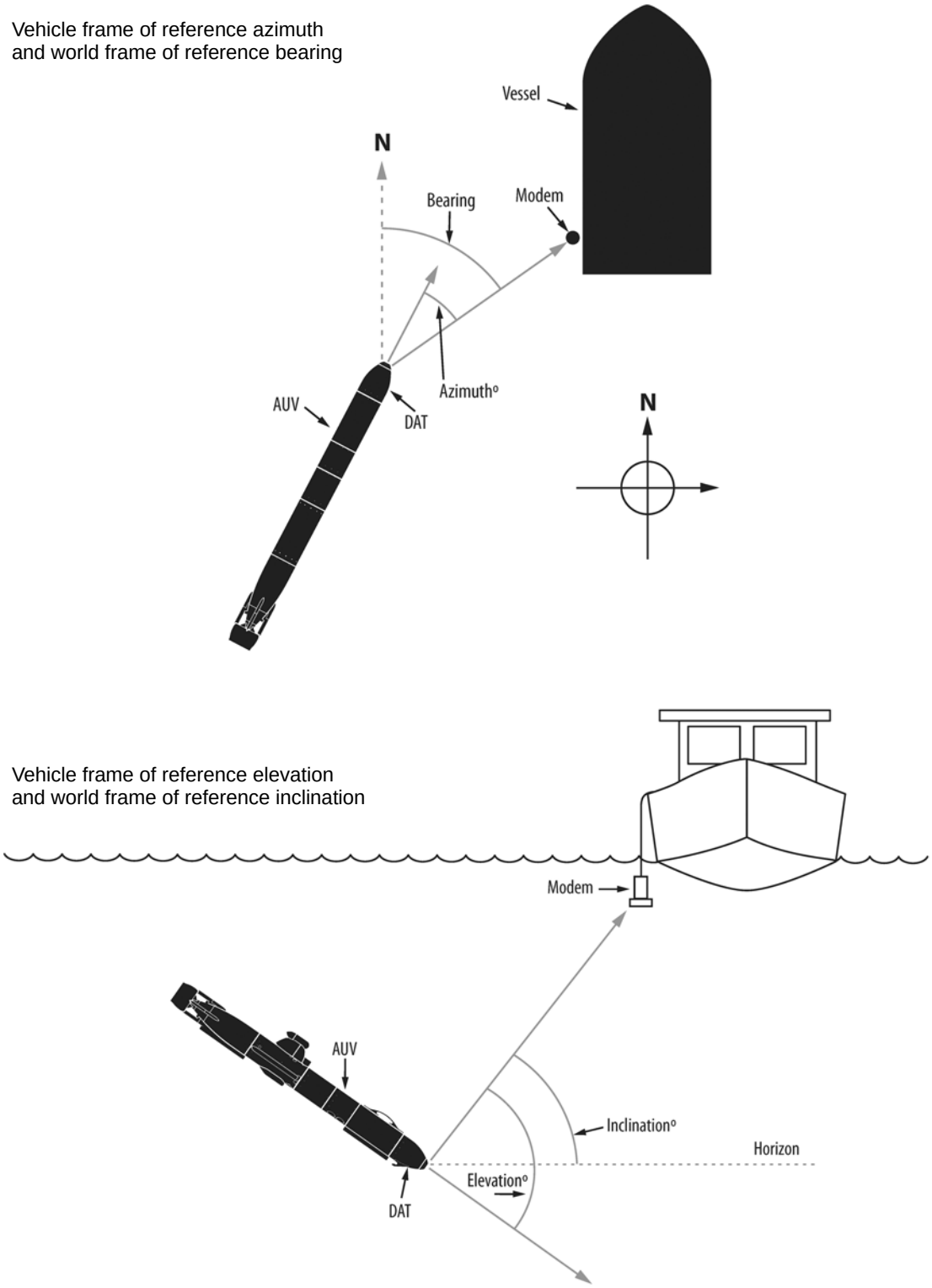

Figure 1-1 Comparing Vehicle Frame of Reference Azimuth and Elevation to World Frame of Reference Bearing and Inclination

compensate for changes in measured bearing that are due to vehicle rotational changes. The DAT-900 Series Directional Acoustic Transponders include a compass which provides a north referenced bearing as well as pitch and roll. Directional parameters within the world frame of reference are absolute and are in terms of north referenced bearing and horizontal referenced inclination. An example bearing is shown in the upper half of Figure 1-1 on page 1-3, and an inclination, in the lower half.

Chirp

Received messages from a remote modem or transponder all include a wide band, swept frequency "chirp" pulse in addition to a multiple frequency shift keying (MFSK) header and data packet along with other signals. This chirp signal is what is continuously being scanned for when listening for messages, and when received, the main receiver prepares to receive the MFSK signals that follow. This chirp pulse is also the signal from which the arrival time differences are measured for determining bearing and inclination. Compared to a continuous wave pulse signal, a chirp signal results in better time resolution and a much higher signal to noise ratio (SNR) for the same pulse width. Because there is a chirp pulse component in every received message, bearing and inclination can be determined for each.

Transponder and Remote Transducer Types

The DAT-900 Series Directional Acoustic Transponders are composed of two types: subsea transponders and transponder board sets. The subsea transponders are transponders with either a built-in low frequency (LF), medium frequency (MF) or Band C USBL transducer, or provisions for the use of a remote USBL transducer. The transponder board sets are for original equipment manufacturer (OEM) applications and include a circuit board set with or without and a remote USBL transducer. The remote USBL transducers are available in MF and Band C frequencies only.

Subsea Transponders

The subsea transponders consist of the following configurations:

DAT-914. Connects to a remote USBL transducer and operates to a depth of 500 m (1640 ft).

DAT-915. Includes a built-in USBL transducer and operates to a depth of 500 m (1640 ft).

DAT-916. Includes a built-in USBL transducer, is externally powered only, and operates to a depth of 500 m (1640 ft).

DAT-924. Connects to a remote USBL transducer and operates to a depth of 2000 m (6560 ft).

DAT-925. Includes a built-in USBL transducer and operates to a depth of 2000 m (6560 ft).

DAT-926. Includes a built-in USBL transducer, is externally powered only, and operates to a depth of 2000 m (6560 ft).

DAT-964. Connects to a remote USBL transducer and operates to a depth of 6000 m (19,680 ft).

DAT-965. Includes a built-in USBL transducer and operates to a depth of 6000 m (19,680 ft).

DAT-966. Includes a built-in USBL transducer, is externally powered only, and operates to a depth of 6000 m (19,680 ft).

DAT-900. Includes a DAT-900 board set only.

DAT-990. Includes a DAT-990 board set only.

DAT-903. Includes a DAT-900 board set and a remote USBL transducer.

DAT-993. Includes a DAT-990 board set and a remote USBL transducer.

NOTE The connector guard on all the DAT-900 Series Directional Acoustic Transponder housings are white to easily distinguish them from the similar looking ATM-900 Series Acoustic Telemetry Modem housings which have black connector guards.

DAT-915 and DAT-914 Directional Acoustic Transponders

The DAT-915 Directional Acoustic Transponder is shown in Figure 1-2. The DAT-915 is completely self contained in a PVC housing and includes a transponder battery pack and a built-in USBL transducer. The DAT-914 is similar to the DAT-915 but does not include a built-in transducer. Instead, a 2-meter cable is provided which connects from the transponder to a remote USBL transducer. Both transponders also include a power/serial connector which is used to input external power instead of using the internal battery pack, and to connect to either an RS-232 or an RS-422 serial interface.

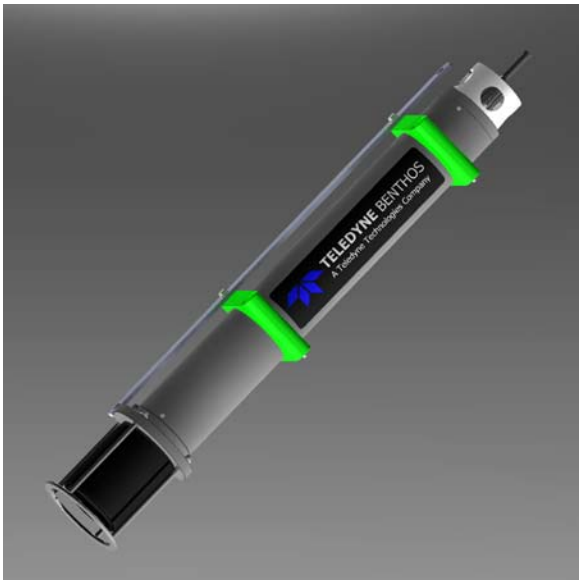

Figure 1-2 The DAT-915 Directional Acoustic Transponder (Shown with LF Transducer)

DAT-916 Directional Acoustic Transponder

The DAT-916 Directional Acoustic Transponder, which is shown in Figure 1-3, is externally powered only. It is contained in a PVC housing and includes a built-in USBL transducer. The DAT-916 also includes a power/serial connector. The connector is used to input external power and to connect to either an RS-232 or an RS-422 serial interface.

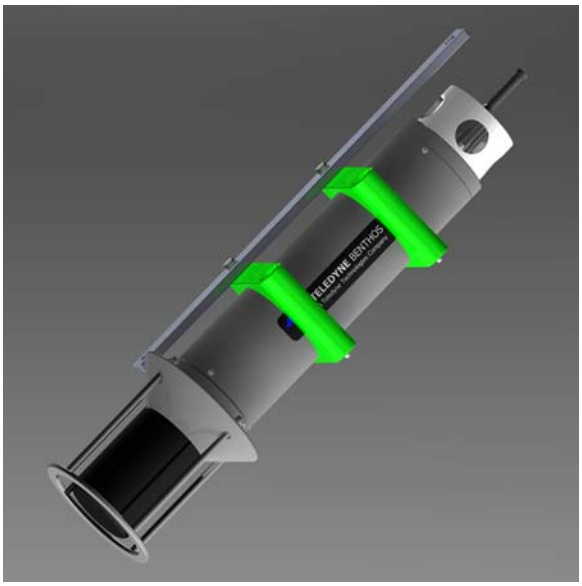

Figure 1-3 The DAT-916 Directional Acoustic Transponder (Shown with MF/BC Transducer)

DAT-925 and DAT-924 Directional Acoustic Transponders

The DAT-925 Directional Acoustic Transponder is shown in Figure 1-4. The DAT-925 is completely self contained in a hard coat anodized aluminum housing and includes a transponder battery pack and a built-in USBL transducer. The DAT-924 is similar to the DAT-925 but does not include a built-in transducer. Instead, a 2-meter cable is provided which connects from the transponder to a remote USBL transducer. Both transponders also include a power/serial connector which is used to input external power instead of using the internal battery pack, and to connect to either an RS-232 or an RS-422 serial interface.

Figure 1-4 The DAT-925 Directional Acoustic Transponder (Shown with MF/BC Transducer)

DAT-926 Directional Acoustic Transponder

The DAT-926 Directional Acoustic Transponder, which is shown in Figure 1-5, is externally powered only. It is contained in a hard coat anodized aluminum housing and includes a built-in USBL transducer. The DAT-926 also includes a power/serial connector. The connector is used to input external power and to connect to either an RS-232 or an RS-422 serial interface.

Figure 1-5 The DAT-926 Directional Acoustic Transponder (Shown with LF Transducer)

DAT-965 and DAT-964 Directional Acoustic Transponders

Figure 1-6 The DAT-965 Directional Acoustic Transponder (Shown with MF/BC Transducer)

The DAT-965 Directional Acoustic Transponder is shown in Figure 1-6. The DAT-965 is completely self contained and includes a transponder battery pack and a built-in USBL transducer. The DAT-965 transponder functions the same as all the other transponders. However, the housing, which is constructed of thick-walled hard coat anodized aluminum, is designed for deployment to full ocean depth. The DAT-964 is similar to the DAT-965 but does not include a built-in transducer. Instead, a 2-meter cable is provided which connects from the transponder to a remote USBL transducer that is also included. Both transponders also include a power/serial connector which is used to input external power instead of using the internal battery pack, and to connect to either an RS-232 or an RS-422 serial interface.

DAT-966 Directional Acoustic Transponder

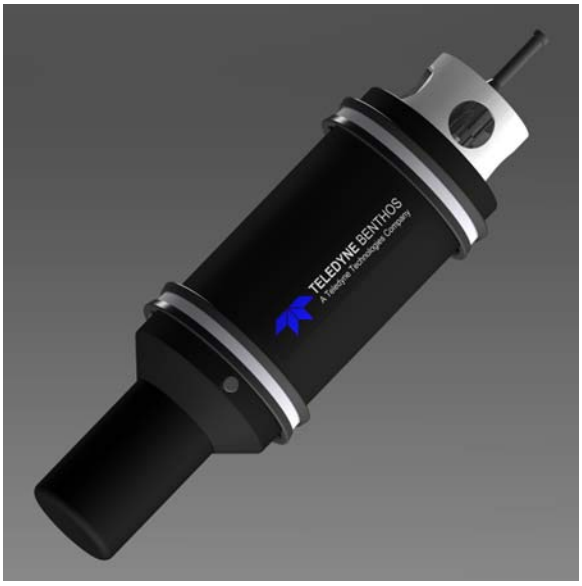

Figure 1-7 The DAT-966 Directional Acoustic Transponder (Shown with MF/BC Transducer)

The DAT-966 Directional Acoustic Transponder, which is shown in Figure 1-7, is externally powered only. It is contained in a thick-walled hard coat anodized aluminum housing which is designed for deployment to full ocean depth and includes a built-in USBL transducer. The DAT-966 also includes a power/serial connector. The connector is used to input external power and to connect to either an RS-232 or an RS-422 serial interface.

Transponder Board Sets

The transponder board sets consist of the following configurations:

DAT-903. Includes the longer chassis configuration and a remote USBL transducer.

DAT-900. Includes the longer chassis configuration and does not include a remote USBL transducer.

DAT-993 Includes the shorter chassis configuration and a remote USBL transducer.

DAT-990. Includes the shorter chassis configuration and does not include a remote USBL transducer.

DAT-903 and DAT-900 Transponder Board Set

The DAT-903 Transponder Board Set is shown in Figure 1-8. This board set is equivalent to the DAT-993 and DAT-990 Board Sets but is contained in a longer chassis. The DAT-903 includes a circuit board set mounted to a chassis and a USBL transducer. The transponder is externally powered and is designed for original equipment manufacture (OEM) applications, where the transponder is integrated into a housing or chassis of another manufacturer's design. The DAT-900 Board Set includes the board set only. No transducer is supplied.

Figure 1-8 The DAT-903 Transponder Board Set

DAT-993 and DAT-990 Transponder Board Set

Figure 1-9 The DAT-993 Transponder Board Set

The DAT-993 Transponder Board Set is shown in Figure 1-9. This board set is equivalent to the DAT-903 and DAT-900 Board Sets but is contained in a shorter chassis. The DAT-993 includes a circuit board set mounted to a chassis and a USBL transducer. The transponder is externally powered and is designed for original equipment manufacture (OEM) applications, where the transponder is integrated into a housing or chassis of another manufacturer's design. The DAT-990 Board Set includes the board set only. No transducer is supplied.

Remote USBL Transducers

The remote USBL transducers are available in two frequency bands: 16–21 kHz (MF) and 22–27 kHz (Band C). Each provides a toroidal transmit and receive beam pattern. Two transducer configurations are also available for each frequency band, standard and right angle. In the standard configuration the connector is in line with the center axis of the transducer. In the right angle configuration it is perpendicular to it. In addition, the connector locking sleeve for a MF transducer is blue, and for a Band C transducer, it is red.

2 Specifications

This section provides the specifications for the Teledyne Benthos DAT-900 Series Directional Acoustic Transponders, including the remote USBL transducers and the transponder battery packs. All specifications are subject to change without notice.

NOTE For detailed dimensional outline information for each of the transponders, refer to Section 7, "Drawings."

General

Except where noted otherwise, the general specifications listed below apply to all of the DAT-900 Series Directional Acoustic Transponders.

Frequency band:	9–14 kHz (LF), 16–21 kHz (MF) or 22.6–27.7 kHz (Band C)
Direction accuracy:	±1° from -50° to +50° elevation and from 0° to 360° bearing ±2° from +50° to 90° (straight above USBL transducer) elevation and from 0° to 360° bearing. Only applies to a stationary transponder. If used on vehicles in motion, the specified accuracies of the motion compensation unit need to be taken into account.
Range accuracy:	0.3 meters
Data modulation:	PSK and MFSK
Bit rate:	2560–15,360 bits/sec (PSK transmit); 140–2400 bits/sec (MFSK transmit and receive)
Addressable transponders:	250
Processing features:	Data redundancy 1/2 rate convolutional coding Multipath guard period

Temperature, operating:	-5°C to 50°C (23°F to 122°F)
Temperature, nonoperating:	-45°C to 85°C (-49°F to 185°F)
Serial interface:	RS-232/422 at 115,200; 57,600; 38,400; 19,200; 9600; 4800; 2400; or 1200 baud
Flow control:	RS-232—hardware RTS/CTS handshaking or software XON/XOFF RS-422—software XON/XOFF handshaking
External DC input power:	12–36 VDC
Average transmit power @ 21 VDC:	20 watts at power level 8 14 watts at power level 7 10 watts at power level 6 7 watts at power level 5 5 watts at power level 4 3.5 watts at power level 3 2.5 watts at power level 2 >2 watts at power level 1 (depending on transducer)
Peak transmit current:	3 A, 50 ms @ 21 VDC
Receive active power:	720 mw max @ 24VDC 650 mw typ @ 24 VDC
Lowpower state power:	12.0 mw max @ 24 VDC 10.2 mw typ @ 24 VDC
Low frequency (LF) USBL transducer:	Frequency band: 9–14 kHz Source level: 178 dB re 1 µPa @ 1 m typ Beam pattern: toroidal ±40° @ 12 khz typ
Medium frequency (MF) USBL transducer:	Frequency band: 16–21 kHz Source level: 178 dB re 1 µPa @ 1 m typ Beam pattern: toroidal ±40° @ 18 khz typ

Band C USBL transducer:	Frequency band: 22–27 kHz Source level: 178 dB re 1 µPa @ 1 m typ Beam pattern: toroidal ±40° @ 25 khz typ
Operator controls:	Plunger type on/off switch (not included on DAT-900, DAT-903, DAT-903, and DAT-993 Transponder Board Sets)
Device enable:	Active low, open collector output. Maximum sink current is 20 mA, maximum applied voltage is 40 VDC, and maximum power is 150 mw.

Real-Time Clock

All the Teledyne Benthos DAT-900 Series Directional Acoustic Transponders include a temperature compensated real-time clock for the date and time. When the transponder is powered on, the clock uses the transponder batteries or external power to keep time, and when powered off, the transponder uses a backup lithium coin cell.

Clock accuracy:	±1 minute/year or ±2 PPM (0° to +40°C) ±4 minute/year or ±7.5 PPM (-40° to +85°C)
Coin cell life:	1.4 years min, 2 years typ

DAT-914 Transponder

The DAT-914 Directional Acoustic Transponder is a 500-meter (1640-ft) depth rated transponder that includes an internal battery pack and connects to any of the remote USBL transducers with a supplied 2-meter cable. The transponder can operate on its battery pack or on external DC power.

NOTE The default power level setting for the DAT-914 Directional Acoustic Transponders is 6. These transponders can be operated at that level indefinitely. However, due to excessive heat that can quickly build up in the PVC housing during continuous transmissions, operation at higher power levels should be limited.

Housing construction:	PVC
Dimensions:	Reference Drawing B-270-493 on page 7-2.
Mounting:	316 stainless steel sidebar
Weight in air:	9.1 kg (20.0 lb)
Weight in water:	3.2 kg (7.0 lb)
Operating depth:	500 m (1640 ft)
POWER/SERIAL connector:	MCBH16M
TRANSDUCER connector:	MBH12FS

DAT-915 Transponder

The DAT-915 Directional Acoustic Transponder is a completely self contained 500-meter (1640-ft) depth rated transponder with a built-in USBL transducer and an internal battery pack. The transponder can operate on its battery pack or on external DC power.

NOTE The default power level setting for the DAT-915 Directional Acoustic Transponders is 6. These transponders can be operated at that level indefinitely. However, due to excessive heat that can quickly build up in the PVC housing during continuous transmissions, operation at higher power levels should be limited.

Housing construction:	PVC
Dimensions:	Reference Drawing B-270-490 on page 7-3.
Mounting:	316 stainless steel sidebar
Weight in air:	10.9 kg (24.0 lb) LF 11.3 kg (25.0 lb) MF 11.3 kg (25.0 lb) Band C
Weight in water:	3.6 kg (8.0 lb)
Operating depth:	500 m (1640 ft)
POWER/SERIAL connector:	MCBH16M

DAT-916 Transponder

The DAT-916 Directional Acoustic Transponder is a 500-meter (1640-ft) depth rated transponder with a built-in USBL transducer. The transponder operates on external DC power only.

NOTE The default power level setting for the DAT-916 Directional Acoustic Transponders is 6. These transponders can be operated at that level indefinitely. However, due to excessive heat that can quickly build up in the PVC housing during continuous transmissions, operation at higher power levels should be limited.

Housing construction:	PVC
Dimensions:	Reference Drawing B-270-496 on page 7-4.
Mounting:	316 stainless steel sidebar
Weight in air:	6.8 kg (15.0 lb) LF 6.4 kg (14.0 lb) MF 5.9 kg (13.0 lb) Band C
Weight in water:	1.8 kg (4.0 lb) LF 1.4 kg (3.0 lb) MF 1.4 kg (3.0 lb) Band C
Operating depth:	500 m (1640 ft)
POWER/SERIAL connector:	MCBH16M

DAT-924 Transponder

The DAT-924 Directional Acoustic Transponder is a 2000-meter (6560-ft) depth rated transponder that includes an internal battery pack and connects to any of the remote USBL transducers with a supplied 2-meter cable. The transponder can operate on its battery pack or on external DC power.

Housing construction:	Hard coat anodized aluminum
Dimensions:	Reference Drawing B-270-492 on page 7-5.
Mounting:	316 stainless steel sidebar
Weight in air:	9.5 kg (21.0 lb)
Weight in water:	3.2 kg (7.0 lb)
Operating depth:	2000 m (6560 ft)

POWER/SERIAL connector: MCBH16M

TRANSDUCER connector: MBH12FS

DAT-925 Transponder

The DAT-925 Directional Acoustic Transponder is a completely self contained 2000-meter (6560-ft) depth rated transponder with a built-in USBL transducer and an internal battery pack. The transponder can operate on its battery pack or on external DC power.

Housing construction: Hard coat anodized aluminum

Dimensions: Reference Drawing B-270-489 on page 7-6.

Mounting: 316 stainless steel sidebar

Weight in air: 11.8 kg (26.0 lb), LF
11.8 kg (26.0 lb), MF
11.3 kg (25.0 lb), Band C

Weight in water: 5.0 kg (11.0 lb), LF
5.4 kg (12.0 lb), MF
5.4 kg (12.0 lb), Band C

Operating depth: 2000 m (6560 ft)

POWER/SERIAL connector: MCBH16M

DAT-926 Transponder

The DAT-926 Directional Acoustic Transponder is a 2000-meter (6560-ft) depth rated transponder with a built-in USBL transducer. The transponder operates on external DC power only.

Housing construction: Hard coat anodized aluminum

Dimensions: Reference Drawing B-270-495 on page 7-7.

Weight in air: 5.9 kg (13.0 lb) LF
6.4 kg (14.0 lb) MF
6.4 kg (14.0 lb) Band C

Weight in water: 2.3 kg (5.0 lb)

Operating depth: 2000 m (6560 ft)

POWER/SERIAL Connector: MCBH16M

DAT-964 Transponder

The DAT-964 Directional Acoustic Transponder is a 6000-meter (19,680-ft) depth rated transponder that includes an internal battery pack and connects to any of the remote USBL transducers with a supplied 2-meter cable. The transponder can operate on its battery pack or on external DC power.

Housing construction:	Hard coat anodized aluminum
Dimensions:	Reference Drawing B-270-494 on page 7-8.
Mounting:	316 stainless steel sidebar
Weight in air:	16.3 kg (36.0 lb)
Weight in water:	7.7 kg (17.0 lb)
Operating depth:	6000 m (19,680 ft)
POWER/SERIAL connector:	MCBH16M
TRANSDUCER connector:	MBH12FS

DAT-965 Transponder

The DAT-965 Directional Acoustic Transponder is a completely self contained 6000-meter (19,680-ft) depth rated transponder with a built-in USBL transducer and an internal battery pack. The transponder can operate on its battery pack or on external DC power.

Housing construction:	Hard coat anodized aluminum
Dimensions:	Reference Drawing B-270-491 on page 7-9.
Mounting:	316 stainless steel sidebar
Weight in air:	18.1 kg (40.0 lb) LF 17.7 kg (39.0 lb) MF 17.2 kg (38.0) Band C
Weight in water:	9.1 kg (20.0 lb)
Operating depth:	6000 m (19,680 ft)
POWER/SERIAL Connector:	MCBH16M

DAT-966 Transponder

The DAT-966 Directional Acoustic Transponder is a 6000-meter (19,680-ft) depth rated transponder with a built-in USBL transducer. The transponder operates on external DC power only.

Housing construction:	Hard coat anodized aluminum
Dimensions:	Reference Drawing B-270-497 on page 7-10.
Weight in air:	8.2 kg (18.0 lb), LF 7.7 kg (17.0 lb), MF 7.3 kg (16.0 lb), Band C
Weight in water:	3.6 kg (8.0 lb), LF 3.6 kg (8.0 lb), MF 3.2 kg (7.0 lb), Band C
Operating depth:	6000 m (19,680 ft)
POWER/SERIAL Connector:	MCBH16M

DAT-900 Transponder Board Set

The DAT-900 Transponder Board Set includes a circuit board set mounted to a chassis. It is externally powered, does not include a remote USBL transducer and is typically sold as spares. It is equivalent to the DAT-990 but in a longer chassis configuration.

Chassis Dimensions:	Reference Drawing B-270-484 page 7-11.
Mounting:	Chassis mounting holes
Weight:	0.34 kg (0.75 lb)

DAT-903 Transponder Board Set

The DAT-903 Transponder Board Set includes both a circuit board set mounted to a chassis and a remote USBL transducer. It is externally powered and is designed for OEM applications. It is equivalent to the DAT-993 but in a longer chassis configuration.

Chassis Dimensions:	Reference Drawing B-270-484 page 7-11.
Mounting:	Chassis mounting holes
Weight:	0.34 kg (0.75 lb)

DAT-990 Transponder Board Set

The DAT-990 Transponder Board Set includes a circuit board set mounted to a chassis. It is externally powered, does not include a remote USBL transducer and is typically sold as spares. It is equivalent to the DAT-900 but in a shorter chassis configuration.

Chassis Dimensions:	Reference Drawing B-270-485 page 7-12.
Mounting:	Chassis mounting holes
Weight:	0.29 kg (0.65 lb)

DAT-993 Transponder Board Set

The DAT-993 Transponder Board Set includes both a circuit board set mounted to a chassis and a remote USBL transducer. It is externally powered and is designed for OEM applications. It is equivalent to the DAT-903 but in a shorter chassis configuration.

Chassis Dimensions:	Reference Drawing B-270-485 page 7-12.
Mounting:	Chassis mounting holes
Weight:	0.29 kg (0.65 lb)

Remote USBL Transducer

The remote USBL transducer is used with the DAT-914, DAT-924 and DAT-964 Directional Acoustic Transponders and the DAT-903 and DAT-993 Transponder Board Sets. It is also optionally available with the DAT-900 and DAT-990 Transponder Board sets. The remote USBL transducer is available in two frequencies: medium frequency (MF) and Band C.

Medium frequency (MF):	Frequency band: 16–21 kHz Source level: 178 dB re 1 µPa @ 1 m typ Beam pattern: toroidal ±40° @ 18 khz typ
Band C:	Frequency band: 22–27 kHz Source level: 178 dB re 1 µPa @ 1 m typ Beam pattern: toroidal ±40° @ 25 khz typ
Housing construction:	PVC
Dimensions:	Reference Drawing B-270-471 on page 7-13 (right angle connector) Reference Drawing B-270-477 on page 7-14 (in-line connector)
Weight in air:	0.9 kg (2.0 lb)
Weight in water:	0.23 kg (0.5 lb)
Operating depth:	2000 m (6560 ft)
Bulkhead connector:	MBH12MP

Transponder Battery Pack Capacities

Two transponder battery packs are available. One is specifically used for the DAT-914, DAT-915, DAT-924 and DAT-925 Directional Acoustic Transponders, and the other for the DAT-964 and DAT-965 Directional Acoustic Transponders. They differ only in their size and watt-hour capacity. Both packs use alkaline batteries.

Transponder Battery Pack Capacity for DAT-914/915/924/925 Directional Acoustic Transponders

Capacity (at power level 08): 250 watt-hours (when transmit power is consistently at the max power level 08)

Capacity (at power level 07): 300 watt-hours (when transmit power is limited to power level 07)

NOTE Stated capacities are at an ambient temperature of 21°C. When operating at 0°C, the battery capacity needs to be derated by 25%.

Transponder Battery Pack Capacity for DAT-964/965 Directional Acoustic Transponders

The battery packs for the DAT-964 and the DAT-965 Directional Acoustic Transponders are actually composed of two separate battery packs, each purchased individually. The capacities stated below are for the combination of the two packs.

Capacity (at power level 08): 400 watt-hours (when transmit power is consistently at the max power level 08)

Capacity (at power level 07): 450 watt-hours (when transmit power is limited to power level 07)

NOTE Stated capacities are at an ambient temperature of 21°C. When operating at 0°C, the battery capacity needs to be derated by 25%.

3 Deployment Considerations

A number of factors must be considered before deploying a Teledyne Benthos DAT-900 Series Directional Acoustic Transponder. These include the required operating depth, the required communications range, the multipath and noise conditions, and the physical protection of the transponders. This section reviews these factors and also presents some typical installation configurations for the transponders.

Multipath and Noise

Because of the advanced modulation techniques used by the DAT-900 Series Directional Acoustic Transponder, reliable operation can be obtained even in relatively severe multipath and noise conditions. However, paying particular attention to the transponder's transducer orientation, its height above the bottom, and its depth below the surface, can reduce the effects of multipath and ambient noise. In some instances the use of acoustic baffles can further improve performance. In addition, the operating frequencies of other acoustic equipment in the area are an important consideration when attempting to achieve optimum performance from the transponders.

USBL Transducer Orientation and Mounting

There are two primary mounting considerations for a DAT-900 Series Directional Acoustic Transponder: its up or down orientation and its rotation from a defined point on the vehicle to that of the transducer's acoustic zero. These considerations apply both to a transponder with a built in USBL transducer and a remote USBL transducer. The up or down position is relative to the horizontal plane of the vehicle it is attached to. The transducer can be installed in either the up or the down position and at any rotation angle. Configuration parameters are available to select the up or down orientation and the rotation from acoustic zero such that the bearing and inclination is always from the defined point on the vehicle. In addition, although the USBL transducer is omnidirectional, its strongest response and its highest bearing accuracy are in the horizontal plane which is off to the side. Refer to Section 2, "Specifications," for bearing accuracy and beam pattern information.

Transducer Up/Down Orientation

The Compass board in the transponder defines the vehicle frame of reference. A transponder with a built-in USBL transducer or a remote USBL transducer may be installed on a vehicle facing up or down. The up or down selection is made with the Orientation configuration parameter, where 1 is down and 0 is up. This configuration parameter corrects the azimuth and elevation angles such that a positive elevation is up, a negative elevation is down, and azimuth is clockwise from the acoustic zero as viewed looking down as shown in Figure 3-1. On a transponder housing the acoustic zero is the center of the on/off switch, and on a remote USBL transducer, the acoustic zero is marked with a "V." The switch is shown in Figure 4-1 on page 4-7, and the "V," in Figure 4-2.

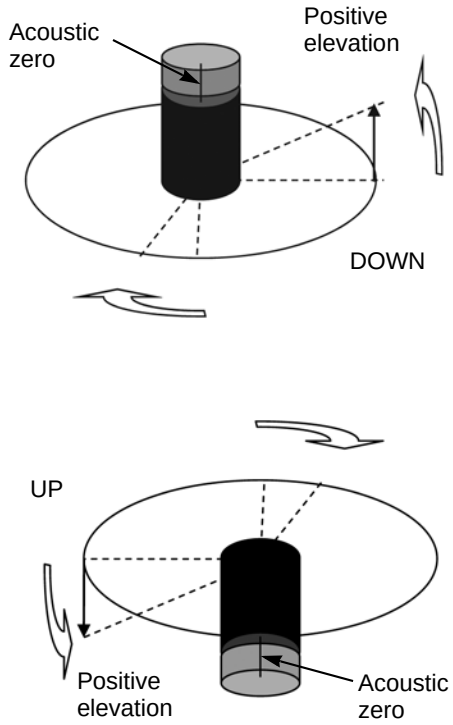

Figure 3-1 Transducer Up and Down Orientations (Transducer Frame)

The default deployment orientation of a transponder with a built-in USBL transducer or a remote USBL transducer is down where it is hanging in the water, the Orientation configuration parameter is set to 1 (down), and the compass is facing up. If you deploy the transponder or remote transducer on a tripod, for example, with the transducer now facing up, the north referenced bearing and inclination angles will still be correct with no Orientation configuration parameter change needed. However, since both the Compass board and the vehicle will now be inverted, the vehicle referenced azimuth and elevation angles must be corrected. To do so, the Compass board in the transponder must be physically inverted, and the Orientation parameter must be set to 0 (up). For a transponder with a remote USBL transducer, either the board or the transponder housing can be inverted.

NOTE For instructions on how to invert the Compass board inside the transponder, contact Teledyne Benthos.

Transducer Rotation

The remote USBL transducer is shown in its standard down orientation and rotated from physical zero in Figure 3-2. The transponder housing is defined to be *down*, such that the connector end cap faces up. The illustration applies also to any of the transponders with built-in transducers. Physical zero is the point on the vehicle from which the vehicle referenced azimuth is to be measured. If this point is not the same as the transducer's acoustic zero, then a rotation offset must be entered. This offset is entered with the Rotation configuration parameter and is the angle from which the acoustic zero is rotated counterclockwise from the defined physical zero.

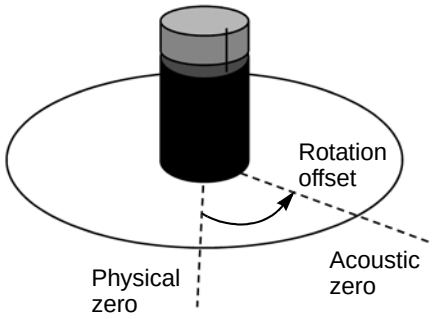

Figure 3-2 Transducer Rotated from Physical Zero

Use of an Acoustic Baffle

For installations with relatively high multipath and ambient noise conditions, such as surface and bottom multipath reflections, ship noise, sea state noise, and other nearby acoustical noise sources, an acoustic baffle can be installed on the remote USBL transducer. The acoustic baffle minimizes the effects of multipath signals and noise sources that arrive from behind the transducer. Teledyne Benthos can custom design and built acoustic baffles for any of the remote USBL transducers, or they can be obtained from other sources.

Height Above the Bottom and Distance Below the Surface

Adjusting the height of a remote USBL transducer above the bottom for fixed bottom installations can reduce the effects of multipath. Generally, raising a transducer that is close to the bottom such that it is two or three meters above the bottom will usually reduce multipath from bottom reflections. Similarly, for a remote USBL transducer that is near the surface, lowering the transducer will generally reduce the effects of multipath from surface reflections, and it will reduce the effects of both ship noise and surface noise.

Other Acoustic Devices

If there are other active acoustic devices in the vicinity of a transponder which transmit at frequencies within or near the operating frequency of the transponders, transponder performance will likely be reduced. The installation and use of other equipment near a transponder should be carefully considered prior to and after installing and deploying a transponder.

Typical Deployment Configurations

The deployment configurations for the DAT-900 Series Directional Acoustic Transponders should take into account the required transponder operating depth and communications range, the multipath and noise influences, and other factors. As there are many possible deployment configurations that will take these factors into account, typical deployment configurations are presented only. In addition, refer to Section 4, "Setup and Test," for information on the cables and connectors used to connect the transponders. The transponders should be set up and tested prior to deployment.

Each transponder is encased within an anodized aluminum or PVC housing. Each remote USBL transducer is encapsulated in a protective urethane mold and mounted to an anodized aluminum housing. These configurations provide a high degree of protection from physical damage. However, for all installation configurations, any installed cables that provide external power to the transponder or connect to a remote USBL transducer should be properly secured to prevent crimping or accidental disconnection.

Transponder Deployment

A transponder is typically moored on the sea floor, attached to a subsea structure, or installed on an AUV. In all cases the transponder’s built-in transducer or its remote USBL transducer should be mounted such that it is oriented correctly. Refer to "USBL Transducer Orientation and Mounting" on page 3-1 for more specific requirements, and to Section 7, "Drawings," for detailed dimensional information on the transponders and remote USBL transducers. When a transponder is moored, it should be securely anchored using a clump weight. And if it is moored or attached to a subsea structure, it should be pulled up vertically using flotation. The sidebar that is attached to the transponder housing is used both to attach the flotation and to anchor the transponder to a clump weight or to a structure.

Corrosion Protection

When mounting a transponder, it is very important to configure the mounting arrangement such that corrosion of the transponder housing is prevented or minimized. It is best to avoid mounting the transponder housing or sidebar directly to a metallic surface. Instead, it is best to use a mounting system made from rubber, plastic, composite, or a non-metallic material. Also, if at all possible, mount the transponder using the attached sidebar which is made of stainless steel. Mounting the transponder directly to a metallic surface, especially if it is made of a dissimilar metal, will cause premature corrosion and failure of the housing. For information on the housing and sidebar material, contact Teledyne Benthos. For information on how to contact Teledyne Benthos, refer to "Customer Service" on page vi.

O-Ring Inspection

When deploying a transponder that has *not* been opened since being sealed at the factory, no O-ring maintenance is required. However, if a transponder has been opened, the O-ring, or in the case of a PVC housing, two O-rings, should be carefully inspected and, if necessary, replaced. Refer to "Cleaning or Replacing an O-ring" on page 6-2 for instructions on how to clean or replace an O-ring.

4 Setup and Test

This section provides instructions on how to unpack and set up the Teledyne Benthos DAT-900 Series Directional Acoustic Transponders.

Unpacking and Inspection

The transponders, their associated components, and this manual are carefully packed in sealed boxes. Every effort is made to pack the transponders to protect them during shipment. However, carefully inspect the boxes for any signs of external damage and immediately report any damage to Teledyne Benthos and to the freight carrier.

After inspecting the boxes, locate and remove the packing list. While referring to the packing list, carefully remove the contents of each of the boxes, checking the items against the packing list to verify that all the items on the list are included. Inspect the items for any physical damage that might have occurred during shipment. Immediately report any damage to Teledyne Benthos and to the freight carrier.

DAT-914 Components

The DAT-914 Directional Acoustic Transponder includes the following components:

- DAT-914 Series Directional Acoustic Transponder with internal alkaline battery pack and stainless steel mounting sidebar
- MCIL16F to serial port 1 DB9 RS-232, serial port 2 DB9 RS-232, and DC power connection
- MIL12M to MIL12F transducer cable
- Remote USBL transducer with MDC12F dummy connector
- MCDC16F dummy connector
- MDC12M dummy connector
- DAT-900 Series Directional Acoustic Transponders User’s Manual
- ATM-900 Series Acoustic Telemetry Modems User’s Manual

DAT-915 Components

The DAT-915 Directional Acoustic Transponder includes the following components:

- DAT-915 Series Directional Acoustic Transponder with internal alkaline battery pack and stainless steel mounting sidebar
- MCIL16F to serial port 1 DB9 RS-232, serial port 2 DB9 RS-232, and DC power connection
- MCDC16F dummy connector
- DAT-900 Series Directional Acoustic Transponders User's Manual
- ATM-900 Series Acoustic Telemetry Modems User's Manual

DAT-916 Components

The DAT-916 Directional Acoustic Transponder includes the following components:

- DAT-916 Series Directional Acoustic Transponder
- MCIL16F to serial port 1 DB9 RS-232, serial port 2 DB9 RS-232, and DC power connection
- MCDC16F dummy connector
- DAT-900 Series Directional Acoustic Transponders User's Manual
- ATM-900 Series Acoustic Telemetry Modems User's Manual

DAT-924 Components

The DAT-924 Directional Acoustic Transponder includes the following components:

- DAT-924 Series Directional Acoustic Transponder with internal alkaline battery pack and stainless steel mounting sidebar
- MCIL16F to serial port 1 DB9 RS-232, serial port 2 DB9 RS-232, and DC power connection
- MIL12M to MIL12F transducer cable
- Remote USBL transducer with MDC12F dummy connector
- MCDC16F dummy connector
- MDC12M dummy connector
- DAT-900 Series Directional Acoustic Transponders User's Manual
- ATM-900 Series Acoustic Telemetry Modems User's Manual

DAT-925 Components

The DAT-925 Directional Acoustic Transponder includes the following components:

- DAT-925 Series Directional Acoustic Transponder with internal alkaline battery pack and stainless steel mounting sidebar
- MCIL16F to serial port 1 DB9 RS-232, serial port 2 DB9 RS-232, and DC power connection
- MCDC16F dummy connector
- DAT-900 Series Directional Acoustic Transponders User's Manual
- ATM-900 Series Acoustic Telemetry Modems User's Manual

DAT-926 Components

The DAT-926 Directional Acoustic Transponder includes the following components:

- DAT-926 Series Directional Acoustic Transponder
- MCIL16F to serial port 1 DB9 RS-232, serial port 2 DB9 RS-232, and DC power connection
- MCDC16F dummy connector
- DAT-900 Series Directional Acoustic Transponders User's Manual
- ATM-900 Series Acoustic Telemetry Modems User's Manual

DAT-964 Components

The DAT-964 Directional Acoustic Transponder includes the following components:

- DAT-964 Series Directional Acoustic Transponder with internal alkaline battery pack and stainless steel mounting sidebar
- MCIL16F to serial port 1 DB9 RS-232, serial port 2 DB9 RS-232, and DC power connection
- MIL12M to MIL12F transducer cable
- Remote USBL transducer with MDC12F dummy connector
- MCDC16F dummy connector
- MDC12M dummy connector
- DAT-900 Series Directional Acoustic Transponders User's Manual
- ATM-900 Series Acoustic Telemetry Modems User's Manual

DAT-965 Components

The DAT-965 Directional Acoustic Transponder includes the following components:

- DAT-965 Series Directional Acoustic Transponder with internal alkaline battery pack and stainless steel mounting sidebar
- MCIL16F to serial port 1 DB9 RS-232, serial port 2 DB9 RS-232, and DC power connection
- MCDC16F dummy connector
- DAT-900 Series Directional Acoustic Transponders User’s Manual
- ATM-900 Series Acoustic Telemetry Modems User’s Manual

DAT-966 Components

The DAT-966 Directional Acoustic Transponder includes the following components:

- DAT-966 Series Directional Acoustic Transponder
- MCIL16F to serial port 1 DB9 RS-232, serial port 2 DB9 RS-232, and DC power connection
- MCDC16F dummy connector
- DAT-900 Series Directional Acoustic Transponders User’s Manual
- ATM-900 Series Acoustic Telemetry Modems User’s Manual

DAT-900 Components

The DAT-900 Board Set includes the following components:

- DAT-900 Series Board Set
- 16-pin internal transducer cable
- 8-pin preamp power cable
- 2-conductor shielded internal transducer cable
- 10-pin Molex connector to DB9 RS-232 cable
- 5-pin Molex connector to DC power cable
- DAT-900 Series Directional Acoustic Transponders User’s Manual
- ATM-900 Series Acoustic Telemetry Modems User’s Manual

DAT-990 Components

The DAT-990 Board Set includes the following components:

- DAT-990 Series Board Set
- 16-pin internal transducer cable
- 8-pin preamp power cable
- 2-conductor shielded internal transducer cable
- 10-pin Molex connector to DB9 RS-232 cable
- 5-pin Molex connector to DC power cable
- DAT-900 Series Directional Acoustic Transponders User's Manual
- ATM-900 Series Acoustic Telemetry Modems User's Manual

DAT-903 Components

The DAT-903 Board Set includes the following components:

- DAT-903 Series Board Set
- Remote USBL transducer with dummy plug
- 2-meter MIL12FS underwater pigtail
- 16-pin internal transducer cable
- 8-pin preamp power cable
- 2-conductor shielded internal transducer cable
- 10-pin Molex connector to DB9 RS-232 cable
- 5-pin Molex connector to DC power cable
- DAT-900 Series Directional Acoustic Transponders User's Manual
- ATM-900 Series Acoustic Telemetry Modems User's Manual

DAT-993 Components

The DAT-993 Board Set includes the following components:

- DAT-993 Series Board Set
- Remote USBL transducer with dummy plug
- 2-meter MIL12FS underwater pigtail
- 16-pin internal transducer cable
- 8-pin preamp power cable
- 2-conductor shielded internal transducer cable
- 10-pin Molex connector to DB9 RS-232 cable
- 5-pin Molex connector to DC power cable
- DAT-900 Series Directional Acoustic Transponders User’s Manual
- ATM-900 Series Acoustic Telemetry Modems User’s Manual

Transponder Connections

Although some cables are included with the transponders, special installations might require customer supplied cables and connectors. For this purpose complete connector and pinout descriptions for the transponders are provided in the following pages.

All the transponders include a POWER/SERIAL connector on the connector end cap for the external power and RS-232/422 connections. The DAT-914, DAT-924 and DAT-964 Directional Acoustic Transponders also include a TRANSDUCER connector on the top end cap for connecting to the supplied remote USBL transducer. A 2-meter cable is also supplied with the transponder for this purpose.

Transponder Operator Functions

All the transponders can be controlled directly from the connected host processor, including the keyboard of a PC if a PC is used as the host processor. The only operator function on the transponders is the on/off switch which is located on the side of the transducer end cap as shown in Figure 4-1. To turn on the transponder, push the switch all the way in. To turn off the transponder, pull the switch all the way out. This configuration causes the transponder to turn on automatically when deployed due to ambient pressure.

NOTE The on/off switch on a transponder is protected with a red rubber cap. This cap must be removed before the switch can be operated and must be left off when deploying the transponder.

Figure 4-1 Transponder On/Off Switch

Acoustic Zero

The center of the on/off switch on a DAT-915, DAT-916, DAT-925, DAT-926, DAT-965, and DAT-966 is the USBL transducer acoustic zero. For the DAT-914, DAT-924 and DAT-964, it is marked on the remote USBL transducer with a "V" as shown in Figure 4-2.

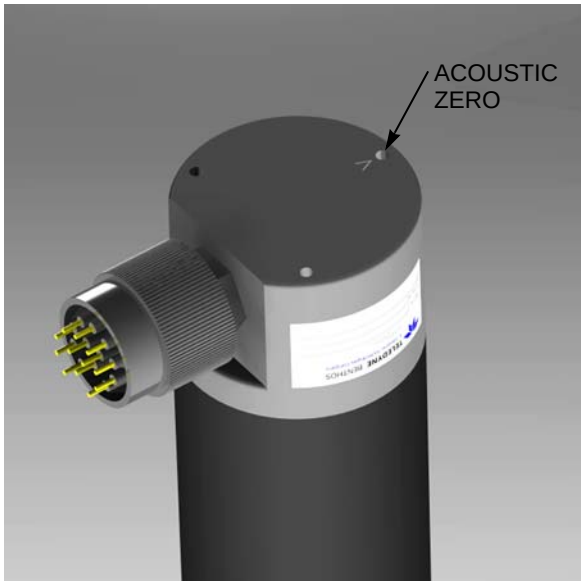

Figure 4-2 Remote USBL Transducer Acoustic Zero

Setting Up the Transponders and Board Sets

To check and operate the transponders and the transponder board sets, they must be connected to their host processors and transducers. A host processor can be either a PC or an instrument.

Setting up the Transponders

Setting up any of the transponders requires making the power and serial interface connections, and for an DAT-914, DAT-924 or DAT-964 Directional Acoustic Transponder, also making the remote USBL transducer connections.

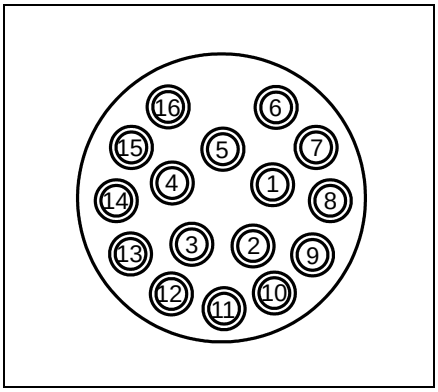

Figure 4-3 Transponder POWER/SERIAL Connector, Face View

Power and Serial Interface Connections. The power and serial interface connections are made with the POWER/SERIAL connector located on the connector end cap of the transponder. Either an RS-232 or an RS-422 serial interface connection can be made. When connecting the transponder to a PC or

Table 4-1 Transponder POWER/SERIAL Connector Pinouts

PIN	LABEL	PORT	FUNCTION	SIGNAL DIRECTION
1	Power	—	External Power Input (21–28 VDC)	To Xpndr
2	Spare		Reserved	—
3	GND		Ground	
4	TX(+)	1	RS-422 Transmit(+)	Xpndr to Host
5	DE		Device Enable (See NOTE below.)	Xpndr to Host
6	RTS/RX(+)		Request to Send/RS-422 Receive(+)	Xpndr to Host/ Host to Xpndr
7	TX(-)		RS-422 Transmit(-)	Xpndr to Host
8	RXD		RS-232 Receive	Host to Xpndr
9	TXD/RX(-)		RS-232 Transmit/RS-422 Receive(-)	Xpndr to Host/ Host to Xpndr
10	GND		Ground	
11	RXD	2	RS-232 Receive	Host to Xpndr
12	TXD		RS-232 Transmit	Xpndr to Host
13	RTS	2	Request to Send	Host to Xpndr
14	DE		Device Enable (See NOTE below.)	Xpndr to Host
15	GND		Ground	
16	Spare	—	Reserved	—

to an instrument, refer to Figure 4-3 for the POWER/SERIAL connector pin orientation, and to Table 4-1 for the pinout information. The POWER/SERIAL connector is a 16-pin Impulse MCBH16M bulkhead connector that requires an Impulse MCIL16F mating connector pigtail. The locking sleeve for this connector identifies the operating frequency band of the transponder. It is black for LF, blue for MF and red for Band C.

NOTE The Device Enable output is on when the transponder is sending data to the host or if the transponder receives the Dial command (ATD). Refer to Section 2, "Specifications," for the Device Enable output electrical specifications.

NOTE When the transponder is switched on, the internal batteries automatically power the transponder when there is no external power or if the external power drops below 22 VDC.

To connect the transponder to a power supply and to an instrument using the RS-232 or RS-422 interface, refer to the pinout information provided in Table 4-1 on page 4-8 for the POWER/SERIAL connector, and to the connector information provided with the instrument. A mating connector pigtail is provided for this purpose.

To connect a transponder to a power supply and to a PC, perform the steps listed below.

1. Connect the connector pigtail to the POWER/SERIAL connector.
2. Refer to Table 4-2 and connect the pins listed to an available serial COM port on the PC. The table shows the connections for a DB-9 serial port connector typically used on laptop computers.
3. Refer to Table 4-1 on page 4-8 and connect the DC power and ground pins to the DC power supply if one is used

Remote USBL Transducer Connections. For an DAT-914, DAT-924 or DAT-964 Directional Acoustic Transponder, connect the supplied transducer cable to the TRANSDUCER connector on the transponder and to the bulkhead connector on the remote USBL transducer.

Table 4-2 Transponder POWER/SERIAL Connector to DB-9 Pin-to-Pin Connections

Transponder POWER/SERIAL CONNECTOR				SIGNAL DIRECTION	HOST PC DB-9 CONNECTOR PORT 1			HOST PC DB-9 CONNECTOR PORT 2		
PIN	**LABEL**	**PORT**	**FUNCTION**		**PIN**	**LABEL**	**FUNCTION**	**PIN**	**LABEL**	**FUNCTION**
10	GND	1	Ground		**5**	GND	Ground	—		
6	RTS		Request to Send	Xpndr to Host	**8**	CTS	Clear to Send			
8	RXD		Receive	Host to Xpndr	**3**	TXD	Transmit			
9	TXD		Transmit	Xpndr to Host	**2**	RXD	Receive			
11	RXD	2	Receive	Host to Xpndr	—			**3**	TXD	Transmit
12	TXD		Transmit	Xpndr to Host				**2**	RXD	Receive
13	RTS		Request to Send	Xpndr to Host				**8**	CTS	Clear to Send
15	GND		Ground					**5**	GND	Ground

Setting up the DAT-900, DAT-990, DAT-903, and DAT-993 Board Sets

The DAT-900, DAT-990, DAT-903, and DAT-993 Board Sets are set up with all of the connections made directly to the boards.

Power and Serial Interface Connections. The power and serial interface connections, RS-232 or RS-422, are made with separate connectors on the DAT-900, DAT-990, DAT-903, and DAT-993 Board Sets. When connecting a board set to a PC or to an instrument, power is connected to J3 of the Transmit/Receiver Board, and one of two serial interface connections is made to J7 of the DSP Board. Refer to Figure 4-4 for the DSP Board serial connector J7 pin orientation, and to Table 4-3 for the pinout information. Refer to Table 4-5 on page 4-13 for the power connector J3 pinouts. J3 requires a Molex 09-50-3051 mating connector with Molex 08-50-0185 pins. J7 requires a Molex 22-55-2101 mating connector with Molex 16-02-1117 pins and Molex15-04-5104 clip. In addition, a Molex 15-04-0292 key must be inserted into pin 1 of the 22-55-2101 connector. J7 is serial port 1.

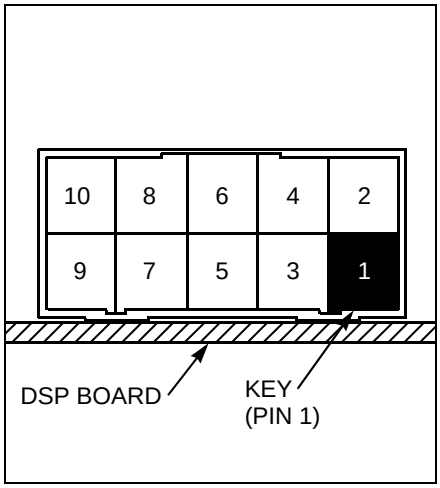

Figure 4-4 DSP Board Serial Connector J7, Face View

The second serial interface connection is made to J8. Refer to Figure 4-5 for the DSP Board serial connector J8 pin orientation, and to Table 4-4 for the pinout information. J8 requires a Hirose DF11-6DS-2C mating connector with Hirose DF11-2428SCA pins. J8 is serial port 2.

The locations of the connectors are shown in Drawing B-270-484 for a DAT-900 and DAT-903 Board Set, and in Drawing B-270-485 for a DAT-990 and DAT-993 Board Set. The drawings are included in Section 7, "Drawings."

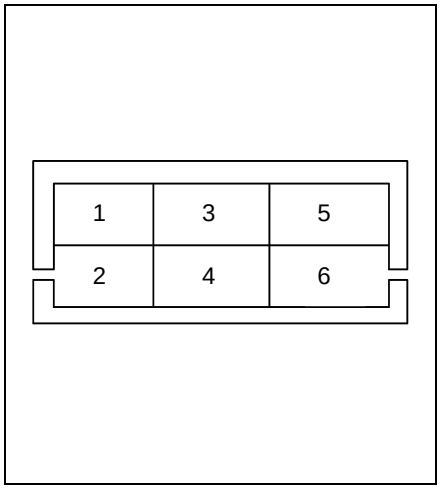

Figure 4-5 DSP Board Serial Connector J8, Face View

Table 4-3 DSP Board Serial Port 1 Connector J7 Pinouts

PIN	LABEL	FUNCTION	SIGNAL DIRECTION
1	Keyed Pin		
2	No Connection		
3	GND	Ground	
4	TXD/RX(-)	RS-232 Transmit/RS-422 Receive(-)	Xpndr to Host/Host to Xpndr
5	TX(+)	RS-422 Transmit(+)	Xpndr to Host
6	RXD	RS-232 Receive	Host to Xpndr
7	DE	Device Enable (See NOTE below.)	Xpndr to Host
8	No Connection		
9	TX(-)	RS-422 Transmit(-)	Xpndr to Host
10	RTS/RX(+)	Request to Send/RS-422 Receive(+)	Xpndr to Host/Host to Xpndr

Table 4-4 DSP Board Serial Port 2 Connector J8 Pinouts

PIN	LABEL	FUNCTION	SIGNAL DIRECTION
1	RTS	Request to Send	Xpndr to Host
2	No Connection		
3	GND	Ground	
4	TXD	RS-232 Transmit	Xpndr to Host
5	DE	Device Enable (See NOTE below.)	Xpndr to Host
6	RXD	RS-232 Receive	Host to Xpndr

NOTE The Device Enable output is on when the transponder is sending data to the host or if the transponder receives the Dial command (ATD). Refer to Section 2, "Specifications," for the Device Enable output electrical specifications.

Table 4-5 Transmit/Receive Board Power Connector J3 Pinouts

PIN	FUNCTION
1	Reserved
2	Ground
3	External Power Input 1 (12–36 VDC)
4	Ground
5	External Power Input 2 (12–36 VDC)

Perform the steps listed below to connect a DAT-900, DAT-990, DAT-903, or DAT-993 Board Set to a DC power supply and to an instrument or PC.

WARNING Pin 5 is NOT protected against reverse polarity. DO NOT connect Pin 5 to the negative of the DC power supply as damage to the transponder will occur. If reverse polarity protection is required, connect Pin 3 to the DC power supply positive instead as described below for Step 4.

1. Refer to Table 4-5 and connect Pin 5 to the DC power supply positive through a 6-Amp inline fuse.
2. Connect Pin 4 to the DC power supply negative.
3. If connecting serial port 1 to an instrument, refer to Table 4-3 on page 4-12 and connect the pins listed to the RS-232 or RS-422 interface of the instrument. For serial port 2, refer to Table 4-4 on page 4-12 and connect the pins listed to the RS-232 interface.

   If connecting serial port 1 to a PC, refer to Table 4-6 for serial port 1 or to Table 4-7 for serial port 2 and connect the pins listed to an available serial COM port on the PC. The tables show the connections for a DB-9 serial port connector typically used on laptop computers.

If required, continue with the steps listed below to connect a second DC power supply as a backup or if reverse polarity protection is required when connecting a single supply.

NOTE Pin 3 is diode protected against reverse polarity. Connect Pin 3 to the DC power supply positive when reverse polarity protection is required. Some power loss will result due to the power dissipation across the diode.

4. Refer to Table 4-5 on page 4-13 and connect Pin 3 to the DC power supply positive through a 6-Amp inline fuse
5. Connect Pin 2 to the DC power supply negative.

Table 4-6 DSP Board Serial Port 1 Connector J7 to DB-9 Pin-to-Pin Connections

DSP BOARD SERIAL PORT 1 CONNECTOR J7			SIGNAL DIRECTION	HOST PC DB-9 CONNECTOR		
PIN	**LABEL**	**FUNCTION**		**PIN**	**LABEL**	**FUNCTION**
3	GND	Ground		**5**	GND	Ground
4	TXD	Transmit	Xpndr to Host	**2**	RXD	Receive
6	RXD	Receive	Host to Xpndr	**3**	TXD	Transmit
10	RTS	Request to Send	Xpndr to Host	**8**	CTS	Clear to Send

Table 4-7 DSP Board Serial Port 2 Connector J8 to DB-9 Pin-to-Pin Connections

DSP BOARD SERIAL PORT 2 CONNECTOR J8			SIGNAL DIRECTION	HOST PC DB-9 CONNECTOR		
PIN	**LABEL**	**FUNCTION**		**PIN**	**LABEL**	**FUNCTION**
1	RTS	Request to Send	Xpndr to Host	**8**	CTS	Clear to Send
3	GND	Ground		**5**	GND	Ground
4	TXD	Transmit	Xpndr to Host	**2**	RXD	Receive
6	RXD	Receive	Host to Xpndr	**3**	TXD	Transmit

Remote USBL Transducer Connections. The DAT-903 and DAT-993 Board Sets include a remote USBL transducer along with the following cable pigtails for connecting the transducer to the board set:

- 2-meter MIL12FS underwater pigtail
- 16-pin internal transducer cable
- 8-pin preamp power cable
- 2-conductor shielded internal transducer cable

Perform the steps listed below to connect the remote USBL transducer to a DAT-903 or DAT-993 Board Set. The locations of the connectors are shown in Drawing B-270-484 for a DAT-903 Board Set, and in Drawing B-270-485 for a DAT-993 Board Set. The drawings are included in Section 7, "Drawings."

1. Wire the conductors of the 2-meter MIL12FS underwater pigtail to the conductors of each of the other listed cable pigtails in accordance with Table 4-8 on page 4-16. Refer to Figure 4-6 for the connector pinout orientation for each of the pigtails.
2. Connect the 16-pin Hirose connector of the 16-pin internal transducer cable to J8 of the 4-Channel Receiver board.
3. Connect the 5-pin Molex connector of the 2-conductor shielded internal transducer cable to J1 of the Transmit/Receive board.
4. Connect the 8-pin Hirose connector of the 8-pin preamp power cable to J14 of the 4-Channel Receiver board.
5. Connect the connector of the 2-meter MIL12FS underwater pigtail to the remote USBL transducer.

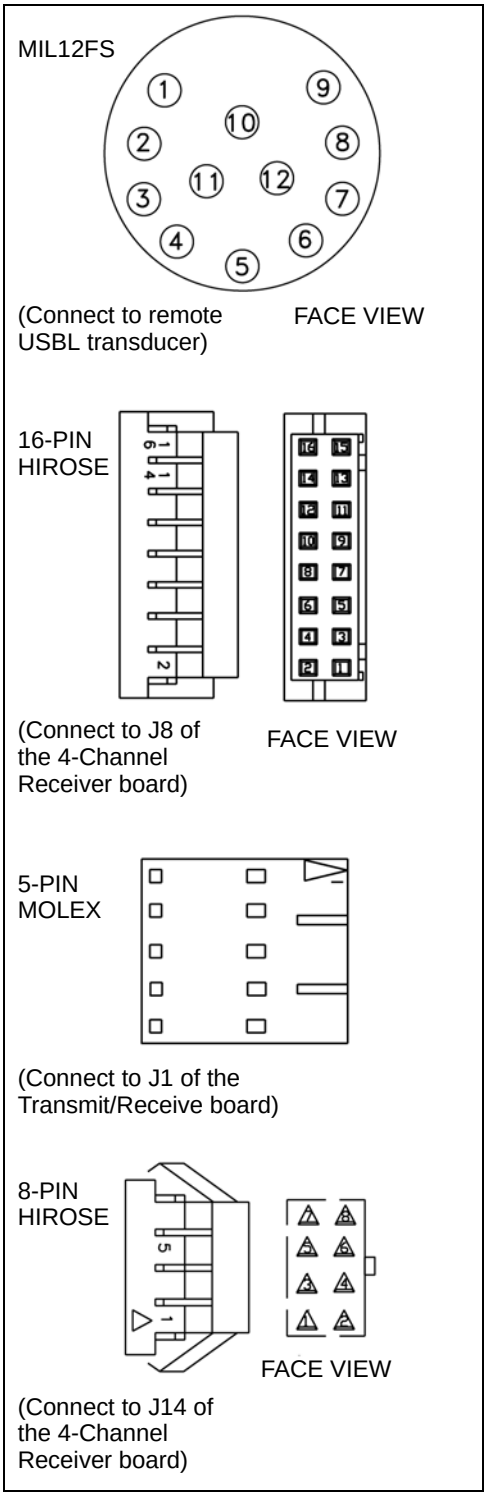

Figure 4-6 DAT-903 and DAT-993 Board Set Transducer Connection Cable Pigtails

Table 4-8 Remote USBL Transducer Cable Wiring

MIL12FS TRANSDUCER CONNECTOR	FUNCTION	16-PIN HIROSE CONNECTOR	5-PIN MOLEX CONNECTOR	8-PIN HIROSE CONNECTOR
1	Hydrophone 1 (-)	12	—	—
2	Hydrophone 1 (+)	11		
3	Hydrophone 2 (-)	7		
4	Hydrophone 2(+)	8		
5	Hydrophone 3 (-)	6		
6	Hydrophone 3 (+)	5		
7	Hydrophone 4 (-)	1		
8	Hydrophone 4 (+)	2		
9	Preamp 3V	—		1
10	N/C			—
11	Transducer (-)		1	
12	Transducer (+)		3	
—	Shield		5	

User Supplied Compass Connections. The DAT-900, DAT-990, DAT-903, and DAT-993 Board Sets optionally include a Compass board which is mounted to the chassis and connects to J3 of the DSP board. J3 is a CMOS interface I/O connector for the compass and can be used with other compass manufacturers. If a different compass will be used, refer to Table 4-9 for the connector pinout information and to Figure 4-7 for the connector pin orientation. For instructions on how to configure and calibrate the compass, refer to "Configuring the Compass" on page 5-40.

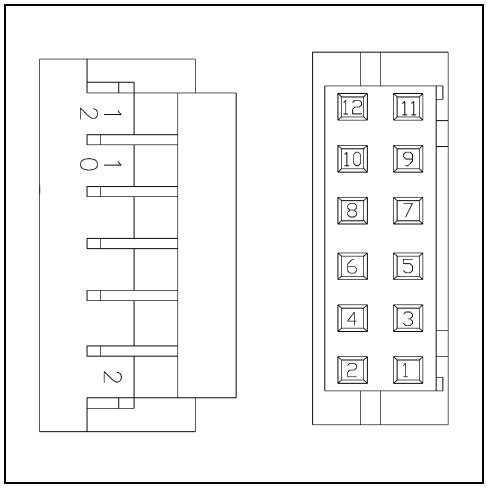

Figure 4-7 DAT-900, DAT-990, DAT-903, and DAT-993 I/O Connector J3, Face View

Table 4-9 DSP Board I/O Connector J3 Pinouts

DSP BOARD I/O CONNECTOR J3	LABEL	FUNCTION	SIGNAL DIRECTION
1	RXD	CMOS Receive	Host to Xpndr
2	GND	Ground	
3	TXD	CMOS Transmit	Xpndr to Host
4	GND	Ground	
5	RE	Release Enable	Xpndr to Host
6	BIN_OUT0	Reserved Output	Xpndr to Host
7	GND	Ground	
8	BIN_OUT1	Reserved Output	Xpndr to Host
9	BIN_IN0	PPS In	Host to Xpndr
10	GND	Ground	
11	BIN_IN1	Reserved Input	Host to Xpndr
12	RELEASE SENSE	Release Sense	Host to Xpndr

Setting up the Host Processor

If a PC is to be used as the host processor, it must be set up to run a terminal program, such as ProComm Plus, which is available from DataStorm Technologies, or Tera Term, which can be downloaded from http://logmett.com/index.php?/products/teraterm.html. The serial port used to connect to the transponder must be selected and correctly configured using the terminal program.

If an instrument is to be used as the host processor, refer to the documentation provided with the instrument for the setup information.

After connecting the transponder to the PC as described in "Setting Up the Transponders and Board Sets" on page 4-7, perform the steps listed below to prepare the PC.

1. Install the terminal program communications software on the PC.
2. Start the terminal program, select the serial port that is connected to the transponder and configure the port as follows:

Baud Rate:	9600 baud
Parity:	None
Data Bits:	8
Stop Bits:	1

In addition, the terminal emulation type should be set to the VT-100 or, if VT-100 is not available, ANSI.

5 Transponder Operation and Configuration

This section provides descriptions of the commands that can be used to display bearing and inclination to any remote ATM-900 Series Acoustic Telemetry Modem or DAT-900 Series Directional Acoustic Transponder, along with pitch, roll and compass heading of the local transponder, and descriptions of the configuration parameters and how to use them to select what data are displayed and to configure a transponder when installing it. Included also are instructions on how to configure the installed compass and load transducer calibration data.

Transponder Commands

Most commands are AT commands which begin with "AT." All commands are entered using the Command Line for Acoustic Modem (CLAM) shell user interface. The DAT-900 Series Directional Acoustic Transponders will accept and execute these commands along with all the same commands accepted and executed by the ATM-900 Series Acoustic Telemetry modems. For instructions on how to enter commands, refer to Section 5, "Modem Operation," of the ATM-900 Series Acoustic Telemetry User’s Manual, P/N M-270-26.

All command responses are received over the connected serial port. In addition, the following display units and polarities are used:

- Azimuths are clockwise in degrees from vehicle physical zero.
- Elevations are positive up and negative down in degrees relative to the vehicle.
- Bearings are clockwise in degrees from north.
- Inclinations are positive up and negative down in degrees relative to the horizon.

Transponder AT Commands

The AT commands that are unique to the DAT-900 Series Directional Acoustic Transponders are listed in Table 5-1. Also listed are the page references to where detailed descriptions of the commands are provided.

Table 5-1 DAT-900 Series Directional Acoustic Transponders AT Command Set

Command Syntax	Command Name	Result	Page
ATRn	Bearing and Inclination	Displays the range, the north referenced bearing and the horizontal referenced inclination.	5-3
ATRRn	Azimuth and Elevation	Displays the range and the vehicle referenced azimuth and elevation.	5-5
ATRCn	Compass and Tilt	Displays the range and the compass heading and tilt.	5-7
ATRTn	Pitch and Roll	Displays the range and the pitch and roll.	5-9
ATRAHn	Bearing	Displays the range and the high resolution north referenced bearing.	5-11
ATRAIn	Inclination	Displays the range and the high resolution horizontal referenced inclination.	5-13
ATRRHn	Azimuth	Displays the range and the high resolution vehicle referenced azimuth.	5-15
ATRREn	Elevation	Displays the range and the high resolution vehicle referenced elevation.	5-17
ATRCHn	Compass	Displays the range and the high resolution compass heading.	5-19
ATRCPn	Pitch	Displays the range and the high resolution pitch.	5-21
ATRCRn	Roll	Displays the range and the high resolution roll.	5-23

Bearing and Inclination ATRn

Syntax

ATRn [Enter]

Definition

The Bearing and Inclination command displays the range, the north referenced bearing and the horizontal referenced inclination. The displayed range is in meters with a resolution of 0.1 meters. The displayed bearing and inclination are in degrees with a resolution of 1.0 degree.

NOTE For a nonzero DatVerbose configuration parameter setting, the output data fields displayed are in accordance with this setting and is the same for all the transponder AT commands. For a DatVerbose configuration parameter setting of zero, the output data fields displayed and their format are in accordance with the setting of the (Verbose) configuration parameter as listed below. Refer to "DatVerbose" on page 5-32 for information on the DatVerbose configuration parameter.

Output format @Verbose=0 and 1:

Bearing: <bearing>, <inclination>
Range <local address> to <remote address> : <range> m

Output format @Verbose=2:

Bearing: <bearing>, <inclination>
Range <local address> to <remote address> : <range> m speed <relative speed> m/s

Output format @Verbose=3:

TX time: hh:mm:ss.nnnn
RX time: hh:mm:ss.nnnn

Bearing: <bearing>, <inclination>
Range <local address> to <remote address> : <range> m (Round-trip <range> ms) speed <relative speed> m/s

Where hh is hours, mm is minutes, ss is seconds, and nnnn is tenths of milliseconds.

How to Use

To use the Bearing and Inclination command, type ATR followed by the address of the remote modem or transponder, and then press Enter.

If the command is sent to a local transponder, the transponder will respond by displaying the north referenced bearing and horizontal referenced inclination in degrees and the range in meters to the remote modem. If the command is sent to a local modem, the modem will respond by displaying the north referenced bearing and horizontal referenced inclination in degrees and the range in meters to the remote transponder. In this case the information is transmitted to the modem from the transponder over the acoustic link. In both cases the displayed information will be in accordance with the Verbose configuration parameter.

Special Considerations

When using the Bearing and Inclination command, take note of the following:

- The displayed range is the one-way range to the remote transponder or modem and is determined acoustically based on the setting of the SpeedOfSound configuration parameter.
- To acquire the range, the local transponder (or modem) transmits an interrogation signal to the remote modem (or transponder). When this signal is received, a reply is transmitted. The local transponder (or modem) must receive the reply within the acoustic response timeout, which is determined by the setting of the AcRspTmOut configuration parameter. If a reply is not received, "Response Not Received" will be displayed.

Azimuth and Elevation ATRRn

Syntax

ATRRn [Enter]

Definition

The Azimuth and Elevation command displays the range and the vehicle referenced azimuth and elevation. The displayed range is in meters with a resolution of 0.1 meters. The displayed azimuth and elevation are in degrees with a resolution of 1.0 degree.

NOTE For a nonzero DatVerbose configuration parameter setting, the output data fields displayed are in accordance with this setting and is the same for all the transponder AT commands. For a DatVerbose configuration parameter setting of zero, the output data fields displayed and their format are in accordance with the setting of the (Verbose) configuration parameter as listed below. Refer to "DatVerbose" on page 5-32 for information on the DatVerbose configuration parameter.

Output format @Verbose=0 and 1:

Azimuth: <azimuth>, <elevation>
Range <local address> to <remote address> : <range> m

Output format @Verbose=2:

Azimuth: <azimuth>, <elevation>
Range <local address> to <remote address> : <range> m speed <relative speed> m/s

Output format @Verbose=3:

TX time: hh:mm:ss.nnnn
RX time: hh:mm:ss.nnnn

Azimuth: <azimuth>, <elevation>
Range <local address> to <remote address> : <range> m (Round-trip <range> ms) speed <relative speed> m/s

For @Verbose=3, hh is hours, mm is minutes, ss is seconds, and nnnn is tenths of milliseconds.

How to Use

To use the Azimuth and Elevation command, type ATRR followed by the address of the remote transponder or modem, and then press Enter.

If the command is sent to a local transponder, the transponder will respond by displaying the vehicle referenced azimuth and elevation in degrees and the range in meters to the remote modem. If the command is sent to a local modem, the modem will respond by displaying the vehicle referenced azimuth and elevation in degrees and the range in meters *to* the modem *from* the remote transponder. In this case the information is transmitted to the modem from the transponder over the acoustic link. In both cases the displayed information will be in accordance with the Verbose configuration parameter.

Special Considerations

When using the Bearing and Inclination command, take note of the following:

- The displayed range is the one-way range to the remote transponder or modem and is determined acoustically based on the setting of the SpeedOfSound configuration parameter.
- To acquire the range, the local transponder (or modem) transmits an interrogation signal to the remote modem (or transponder). When this signal is received, a reply is transmitted. The local transponder (or modem) must receive the reply within the acoustic response timeout, which is determined by the setting of the AcRspTmOut configuration parameter. If a reply is not received, "Response Not Received" will be displayed.

Compass and Tilt ATRCn

Syntax

ATRCn [Enter]

Definition

The Compass and Tilt command displays the range and the compass heading and tilt. The displayed range is in meters with a resolution of 0.1 meters. The displayed compass heading and tilt are in degrees with a resolution of 1.0 degree.

NOTE For a nonzero DatVerbose configuration parameter setting, the output data fields displayed are in accordance with this setting and is the same for all the transponder AT commands. For a DatVerbose configuration parameter setting of zero, the output data fields displayed and their format are in accordance with the setting of the (Verbose) configuration parameter as listed below. Refer to "DatVerbose" on page 5-32 for information on the DatVerbose configuration parameter.

Output format @Verbose=0 and 1:

Compass: <heading>, <tilt>
Range <local address> to <remote address> : <range> m

Output format @Verbose=2:

Compass: <heading>, <tilt>
Range <local address> to <remote address> : <range> m speed <relative speed> m/s

Output format @Verbose=3:

TX time: hh:mm:ss.nnnn
RX time: hh:mm:ss.nnnn

Compass: <heading>, <tilt>
Range <local address> to <remote address> : <range> m (Round-trip <range> ms) speed <relative speed> m/s

For @Verbose=3, hh is hours, mm is minutes, ss is seconds, and nnnn is tenths of milliseconds.

How to Use

To use the Compass and Tilt command, type ATRC followed by the address of the remote transponder or modem, and then press Enter.

If the command is sent to a local transponder, the transponder will respond by displaying its compass heading and tilt in degrees and the range in meters to the remote modem. If the command is sent to a local modem, the modem will respond by displaying the compass heading and tilt in degrees of the remote transponder and the range in meters to the remote transponder. In this case the information is transmitted to the modem from the transponder over the acoustic link. In both cases the displayed information will be in accordance with the Verbose configuration parameter.

Special Considerations

When using the Compass and Tilt command, take note of the following:

- The displayed range is the one-way range to the remote transponder or modem and is determined acoustically based on the setting of the SpeedOfSound configuration parameter.
- To acquire the range, the local transponder (or modem) transmits an interrogation signal to the remote modem (or transponder). When this signal is received, a reply is transmitted. The local transponder (or modem) must receive the reply within the acoustic response timeout, which is determined by the setting of the AcRspTmOut configuration parameter. If a reply is not received, "Response Not Received" will be displayed.

Pitch and Roll ATRTn

Syntax

ATRTn [Enter]

Definition

The Pitch and Roll command displays the range and the pitch and roll. The displayed range is in meters with a resolution of 0.1 meters. The displayed pitch and roll are in degrees with a resolution of 1.0 degree.

NOTE For a nonzero DatVerbose configuration parameter setting, the output data fields displayed are in accordance with this setting and is the same for all the transponder AT commands. For a DatVerbose configuration parameter setting of zero, the output data fields displayed and their format are in accordance with the setting of the (Verbose) configuration parameter as listed below. Refer to "DatVerbose" on page 5-32 for information on the DatVerbose configuration parameter.

Output format @Verbose=0 and 1:

Tilt: <pitch>, <roll>
Range <local address> to <remote address> : <range> m

Output format @Verbose=2:

Tilt: <pitch>, <roll>
Range <local address> to <remote address> : <range> m speed <relative speed> m/s

Output format @Verbose=3:

TX time: hh:mm:ss.nnnn
RX time: hh:mm:ss.nnnn

Tilt: <pitch>, <roll>
Range <local address> to <remote address> : <range> m (Round-trip <range> ms) speed <relative speed> m/s

For @Verbose=3, hh is hours, mm is minutes, ss is seconds, and nnnn is tenths of milliseconds.

How to Use

To use the Pitch and Roll command, type ATRT followed by the address of the remote transponder or modem, and then press Enter.

If the command is sent to a local transponder, the transponder will respond by displaying its pitch and roll in degrees and the range in meters to the remote modem. If the command is sent to a local modem, the modem will respond by displaying the pitch and roll in degrees of the remote transponder and the range in meters to the remote transponder. In this case the information is transmitted to the modem from the transponder over the acoustic link. In both cases the displayed information will be in accordance with the Verbose configuration parameter.

Special Considerations

When using the Pitch and Roll command, take note of the following:

- The displayed range is the one-way range to the remote transponder or modem and is determined acoustically based on the setting of the SpeedOfSound configuration parameter.
- To acquire the range, the local transponder (or modem) transmits an interrogation signal to the remote modem (or transponder). When this signal is received, a reply is transmitted. The local transponder (or modem) must receive the reply within the acoustic response timeout, which is determined by the setting of the AcRspTmOut configuration parameter. If a reply is not received, "Response Not Received" will be displayed.

Bearing ATRAHn

Syntax

ATRAHn [Enter]

Definition

The Bearing command displays the range and the high resolution north referenced bearing. The displayed range is in meters with a resolution of 0.1 meters. The displayed bearing is in degrees with a resolution of 0.1 degree.

NOTE For a nonzero DatVerbose configuration parameter setting, the output data fields displayed are in accordance with this setting and is the same for all the transponder AT commands. For a DatVerbose configuration parameter setting of zero, the output data fields displayed and their format are in accordance with the setting of the (Verbose) configuration parameter as listed below. Refer to "DatVerbose" on page 5-32 for information on the DatVerbose configuration parameter.

Output format @Verbose=0 and 1:

Bearing: <bearing>
Range <local address> to <remote address> : <range> m

Output format @Verbose=2:

Bearing: <bearing>
Range <local address> to <remote address> : <range> m speed <relative speed> m/s

Output format @Verbose=3:

TX time: hh:mm:ss.nnnn
RX time: hh:mm:ss.nnnn

Bearing: <bearing>
Range <local address> to <remote address> : <range> m (Round-trip <range> ms) speed <relative speed> m/s

For @Verbose=3, hh is hours, mm is minutes, ss is seconds, and nnnn is tenths of milliseconds.

How to Use

To use the Bearing command, type ATRAH followed by the address of the remote transponder or modem, and then press Enter.

If the command is sent to a local transponder, the transponder will respond by displaying its high resolution north referenced bearing in degrees and the range in meters to the remote modem. If the command is sent to a local modem, the modem will respond by displaying the high resolution north referenced bearing in degrees of the remote transponder and the range in meters to the remote transponder. In this case the information is transmitted to the modem from the transponder over the acoustic link. In both cases the displayed information will be in accordance with the Verbose configuration parameter.

Special Considerations

When using the Bearing command, take note of the following:

- The displayed range is the one-way range to the remote transponder or modem and is determined acoustically based on the setting of the SpeedOfSound configuration parameter.
- To acquire the range, the local transponder (or modem) transmits an interrogation signal to the remote modem (or transponder). When this signal is received, a reply is transmitted. The local transponder (or modem) must receive the reply within the acoustic response timeout, which is determined by the setting of the AcRspTmOut configuration parameter. If a reply is not received, "Response Not Received" will be displayed.

Inclination ATRAIn

Syntax

ATRAIn [Enter]

Definition

The Inclination command displays the range and the high resolution horizontal referenced inclination. The displayed range is in meters with a resolution of 0.1 meters. The displayed inclination is in degrees with a resolution of 0.1 degree.

NOTE For a nonzero DatVerbose configuration parameter setting, the output data fields displayed are in accordance with this setting and is the same for all the transponder AT commands. For a DatVerbose configuration parameter setting of zero, the output data fields displayed and their format are in accordance with the setting of the (Verbose) configuration parameter as listed below. Refer to "DatVerbose" on page 5-32 for information on the DatVerbose configuration parameter.

Output format @Verbose=0 and 1:

Inclination: <inclination>
Range <local address> to <remote address> : <range> m

Output format @Verbose=2:

Inclination: <inclination>
Range <local address> to <remote address> : <range> m speed <relative speed> m/s

Output format @Verbose=3:

TX time: hh:mm:ss.nnnn
RX time: hh:mm:ss.nnnn

Inclination: <inclination>
Range <local address> to <remote address> : <range> m (Round-trip <range> ms) speed <relative speed> m/s

For @Verbose=3, hh is hours, mm is minutes, ss is seconds, and nnnn is tenths of milliseconds.

How to Use

To use the Inclination command, type ATRAI followed by the address of the remote transponder or modem, and then press Enter.

If the command is sent to a local transponder, the transponder will respond by displaying the high resolution horizontal referenced inclination in degrees and the range in meters to the remote modem. If the command is sent to a local modem, the modem will respond by displaying the high resolution horizontal referenced inclination in degrees and the range in meters to the remote transponder. In this case the information is transmitted to the modem from the transponder over the acoustic link. In both cases the displayed information will be in accordance with the Verbose configuration parameter.

Special Considerations

When using the Inclination command, take note of the following:

- The displayed range is the one-way range to the remote transponder or modem and is determined acoustically based on the setting of the SpeedOfSound configuration parameter.
- To acquire the range, the local transponder (or modem) transmits an interrogation signal to the remote modem (or transponder). When this signal is received, a reply is transmitted. The local transponder (or modem) must receive the reply within the acoustic response timeout, which is determined by the setting of the AcRspTmOut configuration parameter. If a reply is not received, "Response Not Received" will be displayed.

Azimuth ATRRHn

Syntax

ATRRHn [Enter]

Definition

The Azimuth command displays the range and the high resolution vehicle referenced azimuth. The displayed range is in meters with a resolution of 0.1 meters. The displayed inclination is in degrees with a resolution of 0.1 degree.

NOTE For a nonzero DatVerbose configuration parameter setting, the output data fields displayed are in accordance with this setting and is the same for all the transponder AT commands. For a DatVerbose configuration parameter setting of zero, the output data fields displayed and their format are in accordance with the setting of the (Verbose) configuration parameter as listed below. Refer to "DatVerbose" on page 5-32 for information on the DatVerbose configuration parameter.

Output format @Verbose=0 and 1:

Azimuth: <azimuth>
Range <local address> to <remote address> : <range> m

Output format @Verbose=2:

Azimuth: <azimuth>
Range <local address> to <remote address> : <range> m speed <relative speed> m/s

Output format @Verbose=3:

TX time: hh:mm:ss.nnnn
RX time: hh:mm:ss.nnnn

Azimuth: <azimuth>
Range <local address> to <remote address> : <range> m (Round-trip <range> ms) speed <relative speed> m/s

For @Verbose=3, hh is hours, mm is minutes, ss is seconds, and nnnn is tenths of milliseconds.

How to Use

To use the Azimuth command, type ATRRH followed by the address of the remote transponder or modem, and then press Enter.

If the command is sent to a local transponder, the transponder will respond by displaying the high resolution vehicle referenced azimuth in degrees and the range in meters to the remote modem. If the command is sent to a local modem, the modem will respond by displaying the high resolution vehicle referenced azimuth in degrees and the range in meters *to* the modem *from* the remote transponder. In this case the information is transmitted to the modem from the transponder over the acoustic link. In both cases the displayed information will be in accordance with the Verbose configuration parameter.

Special Considerations

When using the Azimuth command, take note of the following:

- The displayed range is the one-way range to the remote transponder or modem and is determined acoustically based on the setting of the SpeedOfSound configuration parameter.
- To acquire the range, the local transponder (or modem) transmits an interrogation signal to the remote modem (or transponder). When this signal is received, a reply is transmitted. The local transponder (or modem) must receive the reply within the acoustic response timeout, which is determined by the setting of the AcRspTmOut configuration parameter. If a reply is not received, "Response Not Received" will be displayed.

Elevation ATRREn

Syntax

ATRREn [Enter]

Definition

The Elevation command displays the range and the high resolution vehicle referenced elevation. The displayed range is in meters with a resolution of 0.1 meters. The displayed elevation is in degrees with a resolution of 0.1 degree.

NOTE For a nonzero DatVerbose configuration parameter setting, the output data fields displayed are in accordance with this setting and is the same for all the transponder AT commands. For a DatVerbose configuration parameter setting of zero, the output data fields displayed and their format are in accordance with the setting of the (Verbose) configuration parameter as listed below. Refer to "DatVerbose" on page 5-32 for information on the DatVerbose configuration parameter.

Output format @Verbose=0 and 1:

Elevation: <elevation>
Range <local address> to <remote address> : <range> m

Output format @Verbose=2:

Elevation: <elevation>
Range <local address> to <remote address> : <range> m speed <relative speed> m/s

Output format @Verbose=3:

TX time: hh:mm:ss.nnnn
RX time: hh:mm:ss.nnnn

Elevation: <elevation>
Range <local address> to <remote address> : <range> m (Round-trip <range> ms) speed <relative speed> m/s

For @Verbose=3, hh is hours, mm is minutes, ss is seconds, and nnnn is tenths of milliseconds.

How to Use

To use the Elevation command, type ATRRE followed by the address of the remote transponder or modem, and then press Enter.

If the command is sent to a local transponder, the transponder will respond by displaying the high resolution vehicle referenced elevation in degrees and the range in meters to the remote modem. If the command is sent to a local modem, the modem will respond by displaying the high resolution vehicle referenced elevation in degrees and the range in meters *to* the modem *from* the remote transponder. In this case the information is transmitted to the modem from the transponder over the acoustic link. In both cases the displayed information will be in accordance with the Verbose configuration parameter.

Special Considerations

When using the Elevation command, take note of the following:

- The displayed range is the one-way range to the remote transponder or modem and is determined acoustically based on the setting of the SpeedOfSound configuration parameter.
- To acquire the range, the local transponder (or modem) transmits an interrogation signal to the remote modem (or transponder). When this signal is received, a reply is transmitted. The local transponder (or modem) must receive the reply within the acoustic response timeout, which is determined by the setting of the AcRspTmOut configuration parameter. If a reply is not received, "Response Not Received" will be displayed.

Compass ATRCHn

Syntax

ATRCHn [Enter]

Definition

The Compass command displays the range and the high resolution compass heading. The displayed range is in meters with a resolution of 0.1 meters. The compass heading is in degrees with a resolution of 0.1 degree.

NOTE For a nonzero DatVerbose configuration parameter setting, the output data fields displayed are in accordance with this setting and is the same for all the transponder AT commands. For a DatVerbose configuration parameter setting of zero, the output data fields displayed and their format are in accordance with the setting of the (Verbose) configuration parameter as listed below. Refer to "DatVerbose" on page 5-32 for information on the DatVerbose configuration parameter.

Output format @Verbose=0 and 1:

Compass: <heading>
Range <local address> to <remote address> : <range> m

Output format @Verbose=2:

Compass: <heading>
Range <local address> to <remote address> : <range> m speed <relative speed> m/s

Output format @Verbose=3:

TX time: hh:mm:ss.nnnn
RX time: hh:mm:ss.nnnn

Compass: <heading>
Range <local address> to <remote address> : <range> m (Round-trip <range> ms) speed <relative speed> m/s

For @Verbose=3, hh is hours, mm is minutes, ss is seconds, and nnnn is tenths of milliseconds.

How to Use

To use the Compass command, type ATRCH followed by the address of the remote transponder or modem, and then press Enter.

If the command is sent to a local transponder, the transponder will respond by displaying its high resolution compass heading in degrees and the range in meters to the remote modem. If the command is sent to a local modem, the modem will respond by displaying the high resolution compass heading in degrees of the remote transponder and the range in meters to the remote transponder. In this case the information is transmitted to the modem from the transponder over the acoustic link. In both cases the displayed information will be in accordance with the Verbose configuration parameter.

Special Considerations

When using the Compass command, take note of the following:

- The displayed range is the one-way range to the remote transponder or modem and is determined acoustically based on the setting of the SpeedOfSound configuration parameter.
- To acquire the range, the local transponder (or modem) transmits an interrogation signal to the remote modem (or transponder). When this signal is received, a reply is transmitted. The local transponder (or modem) must receive the reply within the acoustic response timeout, which is determined by the setting of the AcRspTmOut configuration parameter. If a reply is not received, "Response Not Received" will be displayed.

Pitch ATRCPn

Syntax

ATRCPn [Enter]

Definition

The Pitch command displays the range and the high resolution pitch. The displayed range is in meters with a resolution of 0.1 meters. The pitch is in degrees with a resolution of 0.1 degree.

NOTE For a nonzero DatVerbose configuration parameter setting, the output data fields displayed are in accordance with this setting and is the same for all the transponder AT commands. For a DatVerbose configuration parameter setting of zero, the output data fields displayed and their format are in accordance with the setting of the (Verbose) configuration parameter as listed below. Refer to "DatVerbose" on page 5-32 for information on the DatVerbose configuration parameter.

Output format @Verbose=0 and 1:

Pitch: <pitch>
Range <local address> to <remote address> : <range> m

Output format @Verbose=2:

Pitch: <pitch>
Range <local address> to <remote address> : <range> m speed <relative speed> m/s

Output format @Verbose=3:

TX time: hh:mm:ss.nnnn
RX time: hh:mm:ss.nnnn

Pitch: <pitch>
Range <local address> to <remote address> : <range> m (Round-trip <range> ms) speed <relative speed> m/s

For @Verbose=3, hh is hours, mm is minutes, ss is seconds, and nnnn is tenths of milliseconds.

How to Use

To use the Pitch command, type ATRCP followed by the address of the remote transponder or modem, and then press Enter.

If the command is sent to a local transponder, the transponder will respond by displaying its high resolution pitch in degrees and the range in meters to the remote modem. If the command is sent to a local modem, the modem will respond by displaying the high resolution pitch in degrees of the remote transponder and the range in meters to the remote transponder. In this case the information is transmitted to the modem from the transponder over the acoustic link. In both cases the displayed information will be in accordance with the Verbose configuration parameter.

Special Considerations

When using the Pitch command, take note of the following:

- The displayed range is the one-way range to the remote transponder or modem and is determined acoustically based on the setting of the SpeedOfSound configuration parameter.
- To acquire the range, the local transponder (or modem) transmits an interrogation signal to the remote modem (or transponder). When this signal is received, a reply is transmitted. The local transponder (or modem) must receive the reply within the acoustic response timeout, which is determined by the setting of the AcRspTmOut configuration parameter. If a reply is not received, "Response Not Received" will be displayed.

Roll ATRCRn

Syntax

ATRCRn [Enter]

Definition

The Roll command displays the range and the high resolution roll. The displayed range is in meters with a resolution of 0.1 meters. The displayed range is in meters with a resolution of 0.1 meters. The roll is in degrees with a resolution of 0.1 degree.

NOTE For a nonzero DatVerbose configuration parameter setting, the output data fields displayed are in accordance with this setting and is the same for all the transponder AT commands. For a DatVerbose configuration parameter setting of zero, the output data fields displayed and their format are in accordance with the setting of the (Verbose) configuration parameter as listed below. Refer to "DatVerbose" on page 5-32 for information on the DatVerbose configuration parameter.

Output format @Verbose=0 and 1:

Roll: <roll>
Range <local address> to <remote address> : <range> m

Output format @Verbose=2:

Roll: <roll>
Range <local address> to <remote address> : <range> m speed <relative speed> m/s

Output format @Verbose=3:

TX time: hh:mm:ss.nnnn
RX time: hh:mm:ss.nnnn

Roll: <roll>
Range <local address> to <remote address> : <range> m (Round-trip <range> ms) speed <relative speed> m/s

For @Verbose=3, hh is hours, mm is minutes, ss is seconds, and nnnn is tenths of milliseconds.

How to Use

To use the Roll command, type ATRCR followed by the address of the remote transponder or modem, and then press Enter.

If the command is sent to a local transponder, the transponder will respond by displaying its high resolution roll in degrees and the range in meters to the remote modem. If the command is sent to a local modem, the modem will respond by displaying the high resolution roll in degrees of the remote transponder and the range in meters to the remote transponder. In this case the information is transmitted to the modem from the transponder over the acoustic link. In both cases the displayed information will be in accordance with the Verbose configuration parameter.

Special Considerations

When using the Roll command, take note of the following:

- The displayed range is the one-way range to the remote transponder or modem and is determined acoustically based on the setting of the SpeedOfSound configuration parameter.
- To acquire the range, the local transponder (or modem) transmits an interrogation signal to the remote modem (or transponder). When this signal is received, a reply is transmitted. The local transponder (or modem) must receive the reply within the acoustic response timeout, which is determined by the setting of the AcRspTmOut configuration parameter. If a reply is not received, "Response Not Received" will be displayed.

Transponder CLAM Shell Commands

The following transponder CLAM shell commands are available:

- oneway
- dat

oneway

The `oneway` command causes a remote transponder or modem to transmit a series of pings at 500-ms intervals. These pings allow the transponder sending the command to track the range, bearing and inclination of the remote transponder or modem without having to send additional commands. The command syntax includes the command parameters "address" and "pings," where address is the remote modem or transponder address, and pings is the number of pings to transmit. Group and global addresses are not allowed, and the maximum number of pings is 255. If a value for ping is not entered, 20 pings are transmitted.

Syntax: oneway <address> [<pings>]

Privilege: user

Example 1: To cause the transponder or modem at address 3 to transmit 150 pings at 500-ms intervals, enter:

```
oneway 3 150
```

Example 2: To cause the transponder or modem at address 3 to transmit 20 pings at 500-ms intervals, enter:

```
oneway 3 20
```

or

```
oneway 3
```

NOTE Because of the 500-ms interval limitation, the `oneway` command has a maximum range of 750 meters.

dat

The `dat` command simplifies the setting of the DatVerbose configuration parameter by enabling direct selection of the output data fields to display rather than calculating and entering a setting for the DatVerbose configuration parameter. The available output data fields are shown in Table 5-3 on page 5-33. The following command parameter choices are included in the command:

off No displays are shown.

norm Only time stamp, bearing, inclination, and speed are displayed.

cal Only time stamp and the LVL and RAW fields are displayed.

cap Captures the chirp signal into two .wav files, audio.wav and chans.wav, and saves them on the root directory of the transponder. The audio.wav file is the raw channel information and the chans.wav file is the processed channel information. The signal is captured once the next time data are received over the acoustic link after entering the command.

+FLD Adds the selected field to the current display. A sample output response with invalid data is provided after entering the command.

-FLD Suppresses the display of the selected field from the currently displayed ones. A sample output response with invalid data is provided after entering the command.

load Re-reads the CAL file without having to cycle power or reboot the transponder firmware using the Reboot (ATES) command

In addition to the command parameter choices listed above, a command parameter grouping choice is available which allows checking of the bearing and inclination calculation for various vehicle referenced azimuth and elevations, along with heading, pitch and roll conditions. This command parameter grouping includes the following command parameters:

az Enables manual entry of an azimuth in degrees relative to the vehicle frame. Requires a manual entry of elevation.

el Enables manual entry of an elevation in degrees relative to the vehicle frame. Requires a manual entry of azimuth.

h Optional manual entry of heading in degrees relative to the vehicle frame. Requires a manual entry of azimuth and elevation.

p Optional manual entry of pitch in degrees. Requires a manual entry of azimuth, elevation and heading.

r Optional manual entry of roll in degrees. Requires a manual entry of azimuth, elevation, heading, and pitch.

Syntax: dat [off|norm|cal|cap|load|(+|-<FLD>)|(<az> <el> [<h> [<p> [<r>]]])|]

Privilege: user

Example 1: To display only the time stamp, bearing, inclination, and speed enter:

```
dat norm
```

Example 2: To add the display of the ROT field to the currently displayed data, enter:

```
dat +rot
```

Example 3: To remove the display of the RAW field from the currently displayed data, enter:

```
dat -raw
```

Example 4: To remove all of the displayed data, including the time stamp, enter:

```
dat off
```

Example 5: To input an azimuth of 60 degrees and an elevation of -15 degrees, enter:

```
dat 60 -15
```

Example 6: To input an azimuth of 45 degrees, an elevation of -10 degrees, a heading of 30 degrees, and a pitch of 3 degrees, enter:

```
dat 45 -10 30 3
```

Configuration Parameters

The configuration parameters for the DAT-900 Series Directional Acoustic Transponders determine what additional data are displayed when executing commands and enable configuration of the transponder when installing it, such as its orientation, rotation, gain, and other settings. The DAT-900 Series Directional Acoustic Transponders include these configuration parameters along with all the same configuration parameters included with the ATM-900 Series Acoustic Telemetry modems. The settings for the configuration parameters are displayed and stored using the configuration commands provided by the transponder configuration system. For instructions on how to use these commands, refer to Section 5, "Modem Operation," of the ATM-900 Series Acoustic Telemetry User's Manual, P/N M-270-26.

The configuration parameters for a transponder are in the Dat section of the standard.ini file as shown in Figure 5-1.

```
user:1>@dat
 S|  Dat Params     |   Value      |        Range
--+------------------+-------------+-------------------------------------
  |  PreGain         | 0           | -89..89
  |  Rotation        | 32.0        | 0.0..359.9
  |  DatVerbose      | 0           | 0..65535
  |  RXonDAT         | Ena         | Ena, Dis
  |  Orientation     | 1 (down)    | 0 (up), 1 (down)
  |  ^PhaseA         | 0.000       | radians
  |  ^PhaseB         | 0.000       | radians
  |  ^PhaseC         | 0.000       | radians
  |  ^PhaseD         | 0.000       | radians
```

Figure 5-1 List of Configuration Parameters for the Dat Section of the Standard.ini File

The configuration parameters that are unique to the DAT-900 Series Directional Acoustic Transponders are listed in Table 5-1 Also listed in the table are the page references to where detailed descriptions of the configuration parameters are provided.

Table 5-2 DAT-900 Series Directional Acoustic Transponder Configuration Parameters

Name	Description	Factory Default	Page
PreGain	Offset gain applied to USBL element outputs.	0	5-30
Rotation	Rotation offset applied to the USBL transducer's acoustic zero.	0	5-31
DatVerbose	The output data fields displayed.	0	5-32
RXonDAT	Selects a USBL element or the main element for communications.	Ena	5-34
Orientation	Selects the vertical orientation of the USBL transducer.	1	5-35
PhaseA	Receiver A module phase offset.	Factory calibrated	5-36
PhaseB	Receiver A module phase offset.	Factory calibrated	5-37
PhaseC	Receiver A module phase offset.	Factory calibrated	5-38
PhaseD	Receiver A module phase offset.	Factory calibrated	5-39

NOTE The PhaseA through PhaseD configuration parameter settings can be viewed at any privilege level but can only be changed at the factory privilege level.

PreGain

Default Setting

0	The offset gain applied to the signal outputs of the USBL elements in the USBL transducer is 0.

Definition

The setting of the PreGain configuration parameter adds a positive or a negative offset gain to the USBL element in the USBL transducer such that the signal levels can be matched to those of the main element. This gain adjustment is typically used in special applications where there are long cable runs or the USBL elements are in a separate housing from the main element.

Available Settings

The range of available settings for the PreGain configuration parameter is from -89 to 89.

Special Considerations

When setting the PreGain configuration parameter, take note of the following:

- Automatic gain control (AGC) is controlled by the signal levels on the channel selected by the RXonDAT configuration parameter and is separate from the offset gain.

Rotation

Default Setting

0	The rotation offset applied to the USBL transducer's acoustic zero is 0 degrees.

Definition

The setting of the Rotation configuration parameter adds a rotation offset in degrees to the USBL transducer's acoustic zero and is the angle from which the acoustic zero is rotated counterclockwise from the defined physical zero of the vehicle when the transducer is oriented down. Physical zero is the point on the vehicle from which the north referenced bearing is to be measured. If this point is not the same as the transducer's acoustic zero, then a rotation offset must be entered. Refer to "USBL Transducer Orientation and Mounting" on page 3-1 for more information on transducer rotation.

Available Settings

The range of available settings for the Rotation configuration parameter is from 0.0 to 359.9 degrees.

DatVerbose

Default Setting

0	The output data fields displayed are in accordance with the setting of the (Verbose) configuration parameter.

Definition

The setting of the DatVerbose configuration parameter, when it is a *nonzero* value, determines what output data fields are displayed when entering any of the transponder AT commands *or* when receiving any message. When set to *zero*, the (Verbose) configuration parameter determines what output data fields are displayed when entering any of the transponder AT commands only. No data are displayed when receiving a message.

Available Settings

The range of available settings for the DatVerbose configuration parameter is from 0 to 65535 (0x0000 to 0xFFFF hexadecimal). These settings are shown in Table 5-3 under Bit Value and are in hexadecimal format. Entering any one of these values, either as a decimal number or as a hexadecimal number, determines the output data field displayed under Output Data Fields. To display two or more fields, add the bit values for each. The time stamp does not require a setting and is always displayed for a nonzero setting.

Special Considerations

When setting the DatVerbose configuration parameter, take note of the following:

- The `dat` command can be used to directly select the output data fields to display, eliminating the need to calculate and enter a setting for the DatVerbose configuration parameter. Refer to "dat" on page 5-25 for information on the `dat` command.

Table 5-3 DatVerbose Configuration Parameter Output Data Field Selections

Output Data Field	Description	Bit Value
hh:mm:ss.ssss,	Time of data measurement.	—
LVL=nnn, nnn, nnn, nnn,	Peak analog-to-digital (ADC) level on each of the four USBL elements.	0x2000
RAW=nnn.nn, nn.n,	Transducer frame azimuth and elevation, uncalibrated.	0x0100
CAL=nnn.n, nn.n,	Transducer frame azimuth and elevation, calibrated.	0x0200
ROT=nn.n, nn.n,	Vehicle frame azimuth and elevation.	0x0800
CMP=nnn.n, n.n, n.n,	Compass heading, pitch and roll.	0x0400
BRG=nnn.n, nn.n	World frame bearing and inclination.	0x0001
SPD=n.n,	Speed by Doppler shift.	0x0002

RXonDAT

Default Setting

Ena	The main element of the USBL transducer is used for communications.

Definition

The setting of the RXonDAT configuration parameter selects whether the main element of the USBL transducer or a USBL element is used for receiving communications. This selection is useful in special applications where a split USBL transducer is used. In this setup the USBL elements are in a separate housing from the main element.

Available Settings

There are two available settings for the RXonDAT configuration parameter as listed below:

Ena: Configures the main element of the USBL transducer for communications.

Dis: Configures a USBL element of the USBL transducer for communications.

Special Considerations

When setting the RXonDAT configuration parameter, take note of the following:

- The USBL element used is at the top of the USBL transducer.
- The DAT-900 Series Directional Acoustic Transponders include a main element used for communications and four USBL elements for direction acquisition. The main element's receiver provides automatic gain control (AGC) for the four USBL receivers. For special applications where it is desired to use a USBL element instead of the main element for communications, the RXonDAT configuration parameter will make the switch. In this case the main receiver accepts the received signals from the USBL element and provides the AGC control as it would when connected to the main element.

Orientation

Default Setting

1 (down)	The orientation of the remote USBL transducer on the vehicle is down.

Definition

The setting of the Orientation configuration parameter selects whether the remote USBL transducer on the vehicle is oriented down or up, where in either case the transponder housing is defined to be down. In the transponder down position the connector end cap is facing up. Refer to "USBL Transducer Orientation and Mounting" on page 3-1 for more information on transducer orientation.

Available Settings

There are two available settings for the Orientation configuration parameter as listed below:

1 (down):	The orientation of the USBL transducer on the vehicle is down.
0 (up):	The orientation of the USBL transducer on the vehicle is up.

Special Considerations

When setting the Orientation configuration parameter, take note of the following:

- The Orientation configuration parameter applies only to a transponder with a remote USBL transducer.
- The Orientation configuration parameter should be set to 1 (down) for any of the transponders with built-in transducers.

PhaseA

Default Setting

Factory calibrated	The phase offset applied to the Receiver A module is factory calibrated.

Definition

The setting of the PhaseA applies a phase offset in radians to the Receiver A module on the 4-Channel Receiver board to compensate for slight differences in receiver module phase responses compared with the other receiver modules.

Available Settings

The range of available settings for the PhaseA configuration parameter is from -3.141 to 3.141.

Special Considerations

When setting the PhaseA configuration parameter, take note of the following:

- The PhaseA configuration parameter setting is particular to the Receiver module A. Therefore this module cannot be interchanged with any of the other Receiver modules on the 4-Channel Receiver board.
- The PhaseA configuration parameter setting can only be changed at the factory privilege level.

PhaseB

Default Setting

Factory calibrated	The phase offset applied to the Receiver B module is factory calibrated.

Definition

The setting of the PhaseB applies a phase offset in radians to the Receiver B module on the 4-Channel Receiver board to compensate for slight differences in receiver module phase responses compared with the other receiver modules.

Available Settings

The range of available settings for the PhaseB configuration parameter is from -3.141 to 3.141.

Special Considerations

When setting the PhaseB configuration parameter, take note of the following:

- The PhaseB configuration parameter setting is particular to the Receiver module B. Therefore this module cannot be interchanged with any of the other Receiver modules on the 4-Channel Receiver board.
- The PhaseB configuration parameter setting can only be changed at the factory privilege level.

PhaseC

Default Setting

Factory calibrated	The phase offset applied to the Receiver C module is factory calibrated.

Definition

The setting of the PhaseC applies a phase offset in radians to the Receiver C module on the 4-Channel Receiver board to compensate for slight differences in receiver module phase responses compared with the other receiver modules.

Available Settings

The range of available settings for the PhaseC configuration parameter is from -3.141 to 3.141.

Special Considerations

When setting the PhaseC configuration parameter, take note of the following:

- The PhaseC configuration parameter setting is particular to the Receiver module C. Therefore this module cannot be interchanged with any of the other Receiver modules on the 4-Channel Receiver board.
- The PhaseC configuration parameter setting can only be changed at the factory privilege level.

PhaseD

Default Setting

Factory calibrated	The phase offset applied to the Receiver D module is factory calibrated.

Definition

The setting of the PhaseD applies a phase offset in radians to the Receiver D module on the 4-Channel Receiver board to compensate for slight differences in receiver module phase responses compared with the other receiver modules.

Available Settings

The range of available settings for the PhaseD configuration parameter is from -3.141 to 3.141.

Special Considerations

When setting the PhaseD configuration parameter, take note of the following:

- The PhaseD configuration parameter setting is particular to the Receiver module D. Therefore this module cannot be interchanged with any of the other Receiver modules on the 4-Channel Receiver board.
- The PhaseD configuration parameter setting can only be changed at the factory privilege level.

Configuring the Compass

The compass is internally connected to the CMOS port on J3 of the DSP board. However, access to the compass for configuration and calibration purposes can be made through serial port 1 by connecting this port to an available serial COM port on a PC. The serial port 1 connections are made to the POWER/SERIAL connector of a transponder or on J8 of the DSP board on a transponder board set. Refer to "Setting up the Transponders" on page 4-8 for for instructions on how to connect a PC to the POWER/SERIAL connector, and to "Setting up the DAT-900, DAT-990, DAT-903, and DAT-993 Board Sets" on page 4-11 for instructions on how to connect a PC to J8.

The baud rate of serial port 2 must be set to 19,200 for the installed compass by setting the P2Baud configuration parameter to 19200. In addition, the P2Protocol configuration parameter must be set to 1 (CMOS) for the CMOS port, and the P2NoSleep configuration parameter must be set to Ena to prevent serial port 2 from keeping the transponder awake when attempting to enter the lowpower state. After making these settings, use the `cfg store` command to save them. The serial port settings for the installed compass are listed in the Serial section of the standard.ini file as shown in Table 5-2. The DAT-900 Series Directional Acoustic Transponders use the Ocean Server Technology OS5000-S Solid State Tilt Compensated 3 Axis Digital Compass which uses an RS-232 serial interface.

```
user:3>@Serial.
 S|  Serial Params    |   Value      |        Range
--+------------------+-------------+-------------------------------------
 3|  P1Baud           | 9600         | 1200, 2400, 4800, 9600, 19200, 38400,
  |                   |              | 57600, 115200
 3|  P1EchoChar       | Ena          | Ena, Dis
11|  P1FlowCtl        | 0 (None)     | 0 (None), 1 (SW), 2 (HW), 3 (HW-LP)
  |  P1Mode           | 0 (Cooked)   | 0 (Cooked), 1 (Raw)
 3|  P1IdlePol        | 1 (High)     | 0 (Low), 1 (High)
 3|  P1Protocol       | 0 (RS-232)   | 0 (RS-232), 1 (RS-422)
 3|  P1StripB7        | Dis          | Ena, Dis
  |  P1NoSleep        | Dis          | Ena, Dis
  |  P2Baud           | 19200        | 1200, 2400, 4800, 9600, 19200, 38400,
  |                   |              | 57600, 115200
  |  P2EchoChar       | Dis          | Ena, Dis
  |  P2FlowCtl        | 0 (None)     | 0 (None), 1 (SW)
  |  P2Mode           | 1 (Raw)      |  0 (Cooked), 1 (Raw)
  |  P2Protocol       | 1 (CMOS)     | 0 (RS-232), 1 (CMOS)
  |  P2StripB7        | Dis          | Ena, Dis
  |  P2NoSleep        | Ena          | Ena, Dis
```

Figure 5-2 List of Configuration Parameters for the Serial Section of the Standard.ini File

To access the compass through either of these connectors requires first entering the `compass` command. This command enables a pass through to the CMOS port on J3 from serial port 1. Use this command to verify that the compass is operating properly. Terminate the command by entering Ctrl-D. When entering the compass command, verify that the output is similar to that shown in the example compass output in Figure 5-3.

```
user:4>compass
$C307.8P0.8R0.8*62 at 14:26:43.8988
$C307.8P0.9R0.9*62 at 14:26:43.9972
$C307.8P0.8R0.9*62 at 14:26:44.0890
$C307.6P0.8R0.9*6C at 14:26:44.1890
$C307.6P0.8R0.9*6C at 14:26:44.2871
```

Figure 5-3 Example Compass Output Data

NOTE For instructions on how to calibrate an Ocean Server Technology OS5000-S Solid State Tilt Compensated 3 Axis Digital Compass, refer to its users guide.

Calibrating the USBL Transducer

When replacing the USBL transducer for any transponder, the transducer calibration data file associated with the USBL transducer must be loaded onto the board set. This file is supplied as datacal.txt (or <transducer serial number>.txt for multiple files) and must be loaded using the `rx` command. This command uses the X-Modem protocol to receive the contents of a file from a PC to a named file in the transponder file system. This file is in the flash file system (ffs) of the transponder file system and is named datcal.

To load the contents of the transducer calibration file to datcal, enter:

```
rx /ffs/datcal
```

The transponder responds with:

```
rz: ready to receive /datcal
```

Next, set the communications program on the PC to send using the X-Modem protocol. Select the directory that contains the transducer calibration file, and then open the file. The contents of the file will be transferred to datcal in the flash file system of the transponder.

6 Maintenance and Troubleshooting

This section encompasses the recommended care and maintenance procedures for the transponder components of the Teledyne Benthos DAT-900 Series Directional Acoustic Transponders. Adherence to these procedures will help to ensure many years of continuous, reliable performance from the transponders. In addition, a troubleshooting guide is provided which will assist in isolating and correcting a few of the basic operational problems that could occur during setup or deployment.

NOTE The procedures for changing the DAT-900 Series Directional Acoustic Transponder battery packs and the real-time clock battery are the same as that for the ATM-900 Series Acoustic Telemetry Modems. For instructions on how to change the transponder battery packs, refer to the ATM-900 Series Acoustic Telemetry User's Manual, P/N M-270-26.

General Cleaning and Inspection

After retrieving a transponder, clean and inspect the transponder as follows:

1. Turn the transponder off by pulling the on/off switch all the way out. Refer to Figure 4-1 on page 4-7 for the location of the transponder on/off switch.
2. Using a cloth or paper towel dry the transponder thoroughly.
3. Unplug the cable from the POWER/SERIAL connector on the transponder, inspect and clean the cable, and then clean the connector with an alcohol wipe.
4. Lubricate the POWER/SERIAL connector pins with a light coat of silicone lubricant and install the dummy connector supplied with the transponder.

NOTE Be especially careful not to get any lubricant on the face of the transducer as this will severely degrade its performance.

For the DAT-914, DAT-924 and DAT-964 Directional Acoustic Transponders, perform all the steps listed below. For the DAT-915, DAT-916, DAT-925, DAT-926, DAT-965, and DAT-966 transponders, go to Step 7.

5. Unplug the remote transducer cable from both the remote transducer connector on the transponder and the connector on the remote transducer, inspect and clean the cable, and then clean the connectors with an alcohol wipe.
6. Lubricate the connector pins on both the remote transducer connector on the transponder and the connector on the remote transducer with a light coat of silicone lubricant and install the dummy connectors supplied.
7. Wash down the transponder with clean, *fresh* water and remove any debris that may have become attached to the housing.
8. Clean the transducer with a mild, non-abrasive detergent, being careful to remove any buildup. After cleaning, spray the transducer again with fresh water.

NOTE Do not use an ammonia-based cleaner such as a glass cleaner to clean the transducer.

9. Carefully inspect the transducer for any signs of damage.

Cleaning or Replacing an O-ring

When cleaning or replacing an O-ring, be aware of the following:

- Isopropyl alcohol should be used when cleaning an O-ring.
- Once an O-ring is cleaned and inspected, it should be immediately lubricated with silicone lubricant and installed. O-rings not installed immediately must be relubricated.
- Do not leave a lubricated O-ring sitting on a bench, as it will pick up contaminants.
- The purpose of the silicone lubricant is to allow the O-ring to move into its natural location, which is in the O-ring groove. The lubricant does not create the seal.
- Minimize any stretching when cleaning an O-ring.

- Do not force an O-ring over sharp corners or edges.
- Ensure that the O-ring, its groove and the O-ring surface of the housing are clean.
- When reassembling a housing, use a straight, longitudinal movement. Rotating the housing may cause the O-ring to pinch.

To clean or replace an O-ring:

1. Remove the O-ring using an O-ring removal tool or other suitable device. Be careful not to damage the O-ring.
2. Using isopropyl alcohol and a lint-free cloth or paper towel, thoroughly clean the O-ring groove and the O-ring surface inside the housing.
3. Carefully Inspect the O-ring groove and the O-ring surface for any scratches, nicks or dirt and clean them again if necessary.
4. Allow the surfaces of the O-ring groove and the housing to thoroughly dry.
5. Clean the O-ring with a lint-free cloth or paper towel and a small amount of isopropyl alcohol. Do not use cotton or other materials that leave fibers behind. Avoid stretching the O-ring.
6. Inspect the O-ring for any scratches, cracks or nicks. Discard the O-ring if any of these conditions are present.
7. Using clean fingers, apply a *light*, even coat of silicone lubricant to the O-ring. Spread the lubricant evenly over the entire surface. If necessary, when working with a radial seal, a small amount of the same lubricant can be applied to the O-ring surface inside the housing where the O-ring will seal.

WARNING Apply only a <u>thin</u> coat of silicone lubricant. Too much lubricant could displace the O-ring when it is under pressure.

8. Install the O-ring into the O-ring groove.

Troubleshooting

If during the setup or deployment of a DAT-900 Series Directional Acoustic Transponder, the transponder does not appear to be functioning properly, use the troubleshooting guide in this section for assistance. The troubleshooting guide will help to quickly isolate a few basic operational problems that could occur. However, should further help be required, contact Teledyne Benthos directly. Refer to "Customer Service" on page vi for information on how to contact Teledyne Benthos.

The troubleshooting guide includes a list of symptoms along with a list of recommended checks designed to lead to the most likely cause. Refer to the ATM-900 Series Acoustic Telemetry User's Manual, P/N M-270-26 for information on the configuration parameters and commands not described in this manual.

There is no banner message displayed on the monitor of the host PC connected to a transponder when the transponder is switched on.

A. Verify that the host PC serial port is configured correctly, with the correct baud rate, parity, number of data bits, and number of stop bits. Refer to "Setting up the Host Processor" on page 4-17.

B. Verify that the terminal program communications software is running.

C. Verify that the verbose level as determined from S Register 13 is set to 01, 02 or 03.

D. If the transponder has an internal battery pack, verify that it has not been depleted.

E. Verify that the RS-232 serial cable is configured correctly and that it is connected to the correct serial port on the host PC. Refer to "Setting Up the Transponders and Board Sets" on page 4-7.

The monitor of the host PC connected to a transponder displays the banner message when the transponder is switched on, but there is no displayed response to commands entered from the keyboard of the host PC.

A. Verify that the terminal program communications software echo feature, if it has one, is turned on.

B. If the terminal program communications software does not have an echo feature, enter the Read Register command (ATSn?), where n is 3, to verify that the baud rate selection, as determined by the setting of S Register 3, is one with echo on.

There is serial communications with the local transponder but no transmissions can be heard from the local transponder after entering a command that requires the transponder to transmit an acoustic command.

A. If the UDB-9400 Universal Deck Box is the local transponder, increase the volume setting.

B. If the local transponder is an UDB-9400 Universal Deck Box, or an DAT-914, DAT-924 or DAT-964 Acoustic Telemetry Modem, check the transducer connections.

C. Verify that the verbose level as determined from S Register 13 is set to 01, 02, or 03.

With the verbose level set to 01 or higher, errors—if any—will be displayed which will help in isolating the problem.

D. Verify that the command is being sent correctly.

E. If the transponder is a transponder, verify that the transponder battery pack has not been depleted.

After entering a command that requires the transponder to transmit an acoustic command, transmissions can be heard from the local transponder, but there are no responses heard from the remote transponder.

A. Verify that the correct address for the remote transponder is being entered when entering the command.

B. Verify that the correct transponder transducers have been selected and that they are oriented correctly. Refer to "Multipath and Noise" on page 3-1 for information on making the optimum selection.

C. Verify that the remote transponder is switched on.

For a transponder deployed in deep water, water pressure will push the on/off switch in, turning on the transponder. If deployed in shallow water, it may be necessary to retrieve the transponder to verify that it is turned on.

D. If the remote transponder is a transponder, verify that the transponder battery pack has not been depleted.

7 Drawings

This section includes the outline and wiring drawings for the Teledyne Benthos DAT-900 Series Directional Acoustic Transponders. Refer to these drawings when setting up and installing the transponders.

Subsea Transponders

B-270-493	Outline, DAT-914 Transponder
B-270-490	Outline, DAT-915 Transponder
B-270-496	Outline, DAT-916 Transponder
D-270-492	Outline, DAT-924 Transponder
D-270-489	Outline, DAT-925 Transponder
D-270-495	Outline, DAT-926 Transponder
D-270-494	Outline, DAT-964 Transponder
D-270-491	Outline, DAT-965 Transponder
C-270-497	Outline, DAT-966 Transponder

Transponder Board Sets

B-270-484	Outline, DAT-900 OEM Board Set, Long Chassis
B-270-485	Outline, DAT-990 OEM Board Set, Short Chassis

Remote USBL Transducers

B-270-471	Outline, Remote DAT MF/Band C Transducer, Right Angle Connector
B-270-477	Outline, Remote DAT MF/Band C Transducer, In-Line Connector

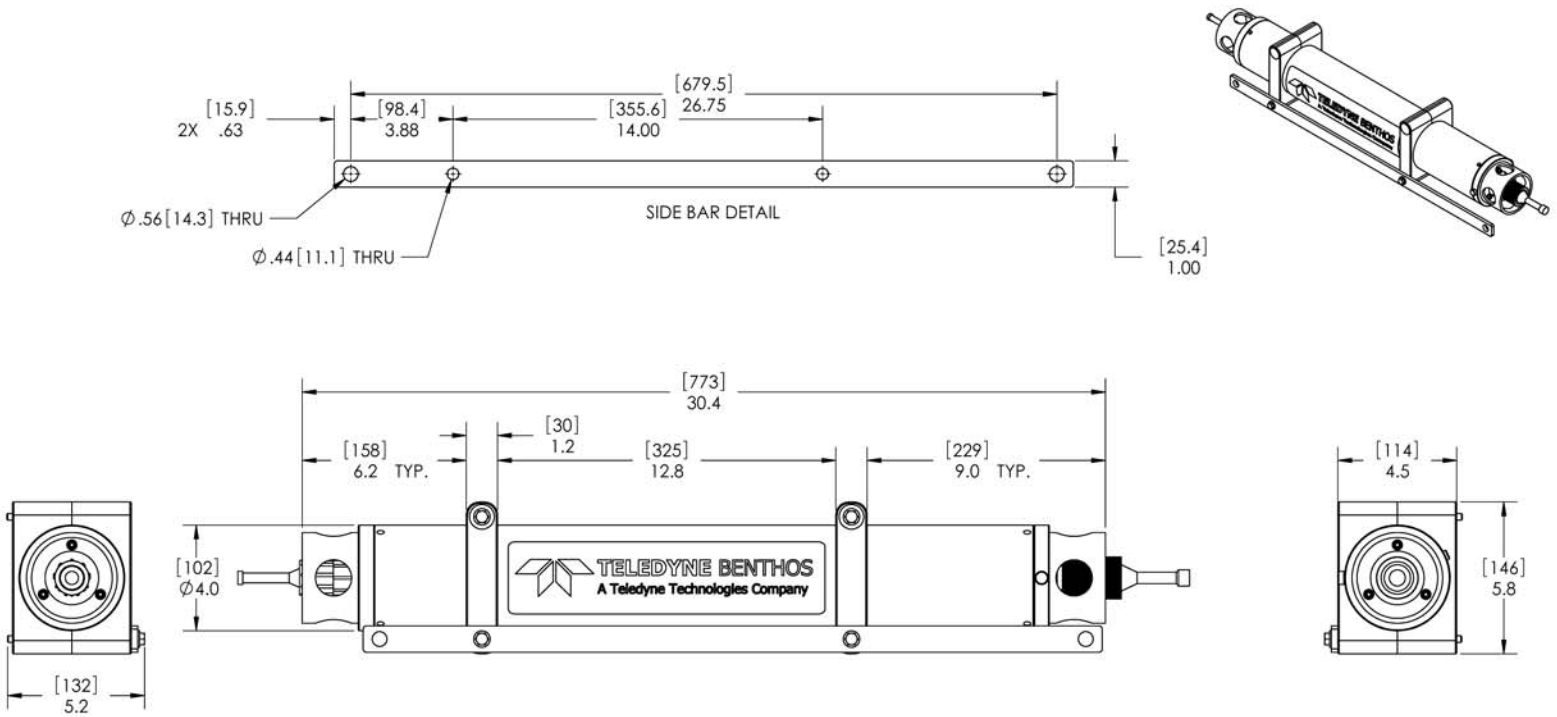

NOTES:
1. DIMENSIONS ARE IN INCHES [mm]
2. WEIGHT IN AIR: 20 LBS [9.1 kg]
3. WEIGHT IN WATER: 7 LBS [3.2 kg]

DATE	REV.	ECO#	DESCRIPTION	AUTH.	DR.	CK.
10/13/2011	A		RELEASED	WRB	RDB	BJ

TOLERANCES EXCEPT AS NOTED
DECIMAL: .X ± .015, .XX ± .010, .XXX ± .005
FRACTIONAL: ± 1/64 HOLE SIZE, ± 1/64 HOLE LOCATION, ± 1/32 GENERAL
ANGULAR: ± 1°
BREAK SHARP EDGES EXCEPT AS NOTED TO: R .010
ALL SURFACES EXCEPT AS NOTED 63

PROPRIETARY
THIS DOCUMENT AND THE INFORMATION CONTAINED THEREIN IS PROPRIETARY TO TELEDYNE BENTHOS, INC. AND MAY NOT BE USED, REPRODUCED OR DISCLOSED WITHOUT THE EXPRESS WRITTEN CONCENT OF TELEDYNE BENTHOS, INC. 49 - EDGERTON DR. - NORTH FALMOUTH, MA 02556

CAGE CODE: 26858
DRAWN BY: RICH BUSER
CHECKED BY: B. JOSEPH
AUTH. BY: WRB
FILE NAME: B-270-493RA

TELEDYNE BENTHOS
A Teledyne Technologies Company
TITLE: OUTLINE, DAT-914
DRAWING NUMBER: B-270-493
REVISION: A
DATE: 10/5/2011
SCALE: 1:4
SHEET 1 OF 1

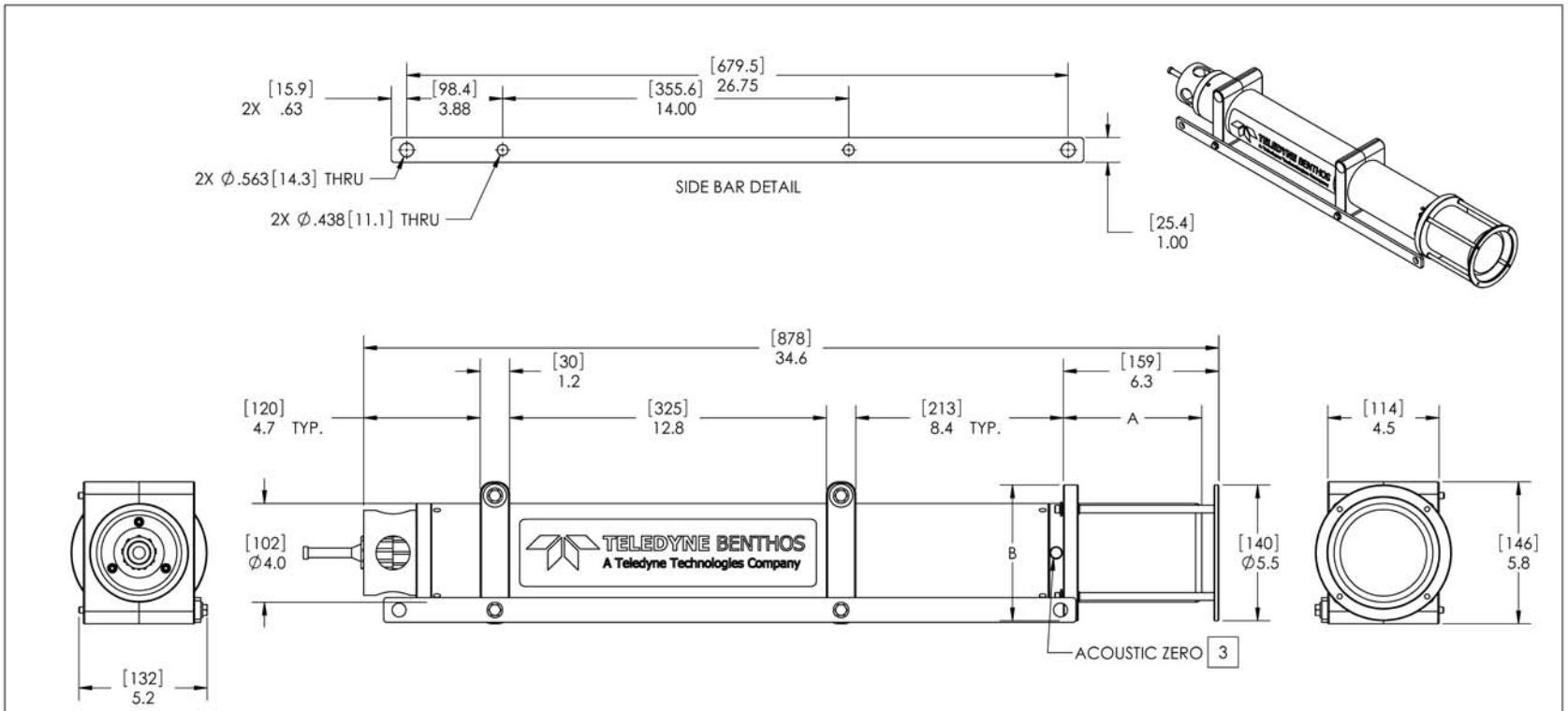

NOTES:
1. DIMENSIONS ARE IN INCHES [mm]
2. LF SHOWN
3. THE ON/OFF SWITCH IS THE USBL TRANSDUCER ACOUSTIC ZERO.

	WEIGHT IN AIR	WEIGHT IN WATER	A	B
LF	24 LBS [10.9 kg]	8 LBS [3.6 kg]	5.0 [127]	5.5 [140]
MF	25 LBS [11.3 kg]	8 LBS [3.6 kg]	6.2 [157]	6.2 [157]
BAND C	25 LBS [11.3 kg]	8 LBS [3.6 kg]	5.6 [142]	6.2 [157]

DATE	REV.	ECO#	DESCRIPTION	AUTH.	DR.	CK.
10/13/2011	A		RELEASED	WRB	RDB	BJ

TOLERANCES EXCEPT AS NOTED
DECIMAL: .X ± .015, .XX ± .010, .XXX ± .005
FRACTIONAL: ± 1/64 HOLE SIZE, ± 1/64 HOLE LOCATION, ± 1/32 GENERAL
ANGULAR: ± 1°
BREAK SHARP EDGES EXCEPT AS NOTED TO: R .010
ALL SURFACES EXCEPT AS NOTED 63

PROPRIETARY
THIS DOCUMENT AND THE INFORMATION CONTAINED THEREIN IS PROPRIETARY TO TELEDYNE BENTHOS, INC. AND MAY NOT BE USED, REPRODUCED OR DISCLOSED WITHOUT THE EXPRESS WRITTEN CONCENT OF TELEDYNE BENTHOS, INC. 49 - EDGERTON DR. - NORTH FALMOUTH, MA 02556

CAGE CODE: 26858
DRAWN BY: RICH BUSER
CHECKED BY: B. JOSEPH
AUTH. BY: WRB
FILE NAME: B-270-490RA

TELEDYNE BENTHOS
A Teledyne Technologies Company

TITLE: OUTLINE, DAT-915
DRAWING NUMBER: B-270-490
REVISION: A
DATE: 10/13/2011
SCALE: 1:4
SHEET 1 OF 1

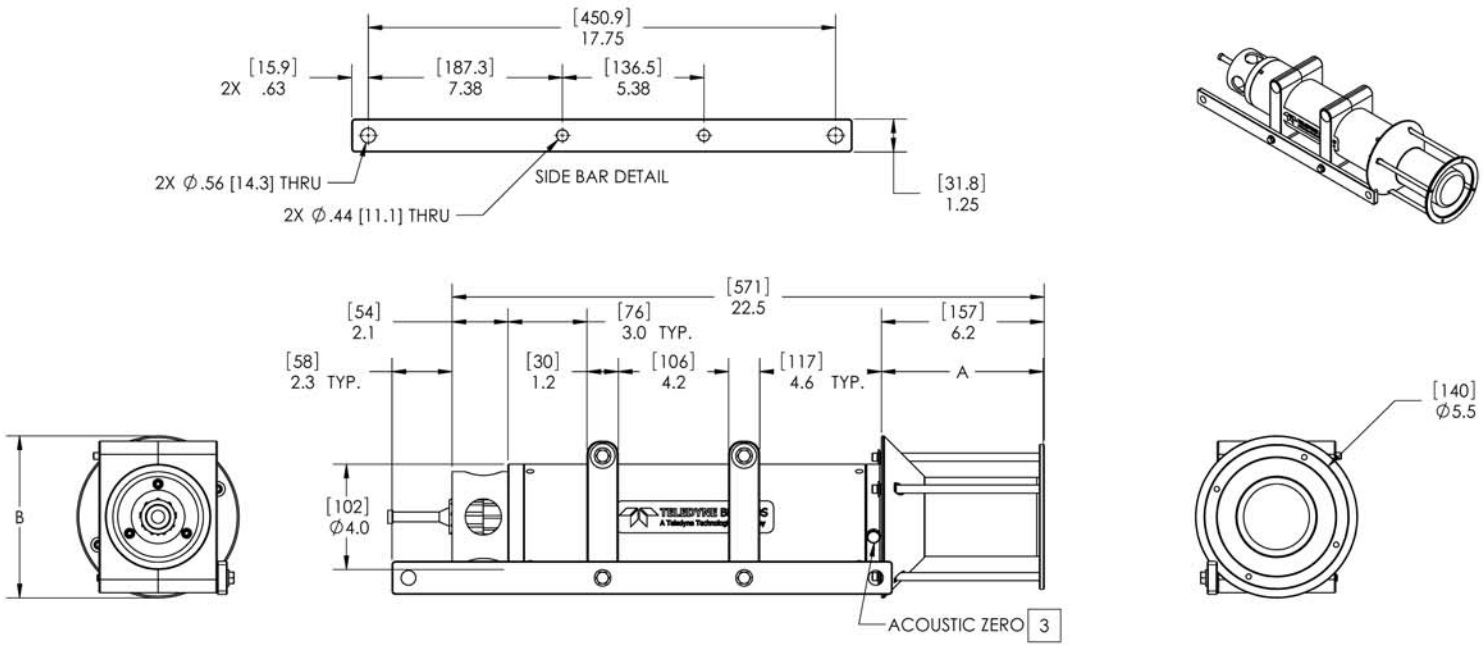

NOTES:
1. DIMENSIONS ARE IN INCHES [mm]
2. MF SHOWN
3. THE ON/OFF SWITCH IS THE USBL TRANSDUCER ACOUSTIC ZERO.

	WEIGHT IN AIR	WEIGHT IN WATER	A	B
LF	15 LBS [6.8 kg]	4 LBS [1.8 kg]	5.0 [127]	5.5 [140]
MF	14 LBS [6.4 kg]	3 LBS [1.4 kg]	6.2 [157]	6.2 [157]
BAND C	13 LBS [5.9 kg]	3 LBS [1.4 kg]	5.6 [142]	6.2 [157]

DATE	REV.	ECO#	DESCRIPTION	AUTH.	DR.	CK.
10/25/2011	A		RELEASED	WRB	RDB	BJ

TOLERANCES EXCEPT AS NOTED
DECIMAL: .X ± .015, .XX ± .010, .XXX ± .005
FRACTIONAL: ± 1/64 HOLE SIZE, ± 1/64 HOLE LOCATION, ± 1/32 GENERAL
ANGULAR: ± 1°
BREAK SHARP EDGES EXCEPT AS NOTED TO: R .010
ALL SURFACES EXCEPT AS NOTED 63

PROPRIETARY

THIS DOCUMENT AND THE INFORMATION CONTAINED THEREIN IS PROPRIETARY TO TELEDYNE BENTHOS, INC. AND MAY NOT BE USED, REPRODUCED OR DISCLOSED WITHOUT THE EXPRESS WRITTEN CONSENT OF TELEDYNE BENTHOS, INC. 49 - EDGERTON DR. - NORTH FALMOUTH, MA 02556

CAGE CODE: 26858
DRAWN BY: RICH BUSER
CHECKED BY: B. JOSEPH
AUTH. BY: WRB
FILE NAME: B-270-496RA

TELEDYNE BENTHOS
A Teledyne Technologies Company

TITLE: OUTLINE, DAT-916
DRAWING NUMBER: B-270-496
REVISION: A
DATE: 10/25/2011
SCALE: 1:4
SHEET 1 OF 1

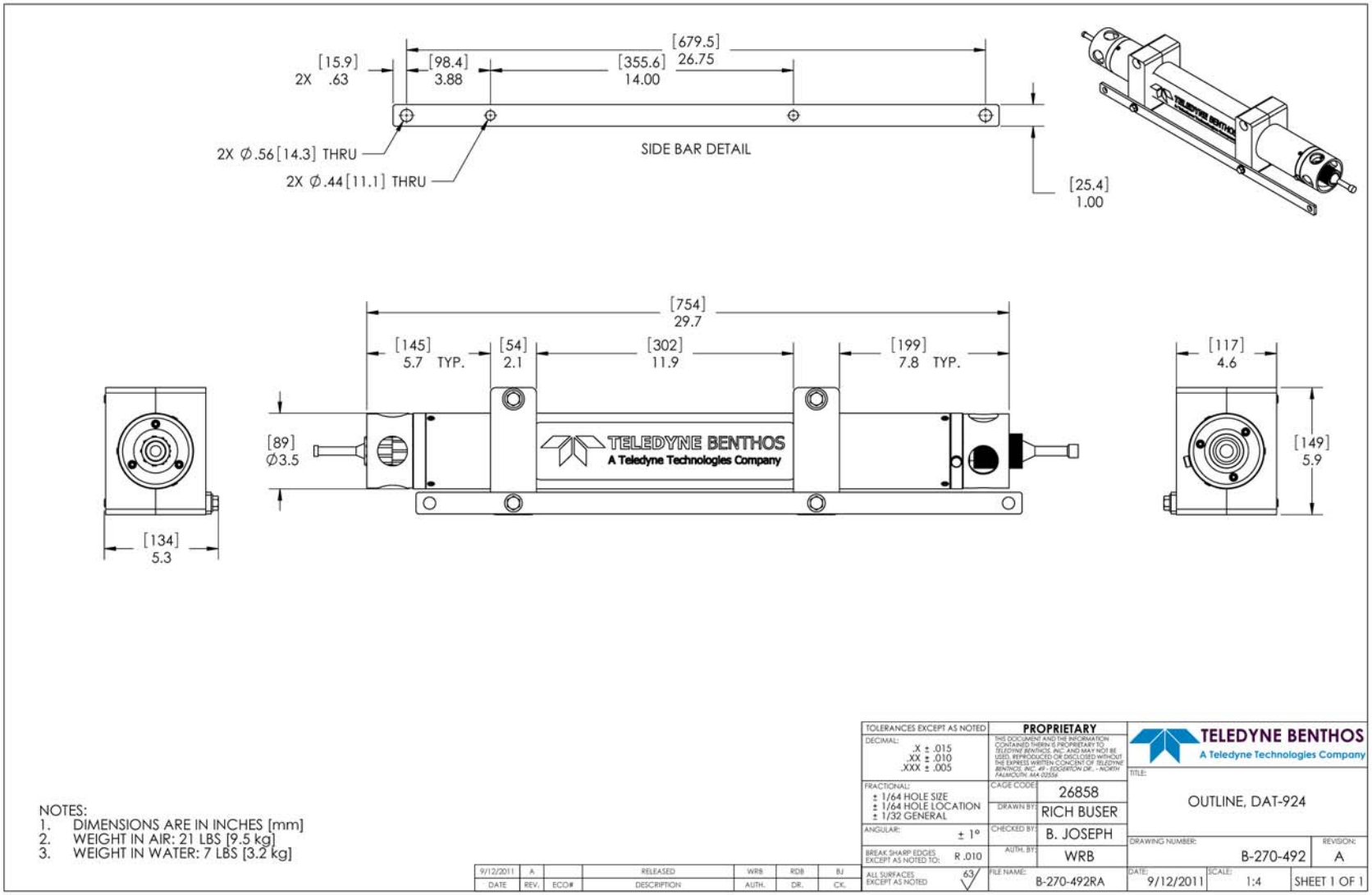
[679.5]
26.75
[15.9]
2X .63
[98.4]
3.88
[355.6]
14.00
2X Ø.56[14.3] THRU
2X Ø.44[11.1] THRU
SIDE BAR DETAIL
[25.4]
1.00
[754]
29.7
[145]
5.7 TYP.
[54]
2.1
[302]
11.9
[199]
7.8 TYP.
[117]
4.6
[89]
Ø3.5
TELEDYNE BENTHOS
A Teledyne Technologies Company
[149]
5.9
[134]
5.3
NOTES:
1. DIMENSIONS ARE IN INCHES [mm]
2. WEIGHT IN AIR: 21 LBS [9.5 kg]
3. WEIGHT IN WATER: 7 LBS [3.2 kg]
9/12/2011 | A | RELEASED | WRB | RDB | BJ
DATE | REV. | ECO# | DESCRIPTION | AUTH. | DR. | CK.
TOLERANCES EXCEPT AS NOTED
DECIMAL: .X ± .015 .XX ± .010 .XXX ± .005
FRACTIONAL: ± 1/64 HOLE SIZE ± 1/64 HOLE LOCATION ± 1/32 GENERAL
ANGULAR: ± 1°
BREAK SHARP EDGES EXCEPT AS NOTED TO: R .010
ALL SURFACES EXCEPT AS NOTED 63
PROPRIETARY
THIS DOCUMENT AND THE INFORMATION CONTAINED THEREIN IS PROPRIETARY TO TELEDYNE BENTHOS, INC. AND MAY NOT BE USED, REPRODUCED OR DISCLOSED WITHOUT THE EXPRESS WRITTEN CONCENT OF TELEDYNE BENTHOS, INC. 49 - EDDEMTON DR. - NORTH FALMOUTH, MA 02556
CAGE CODE: 26858
DRAWN BY: RICH BUSER
CHECKED BY: B. JOSEPH
AUTH. BY: WRB
FILE NAME: B-270-492RA
TELEDYNE BENTHOS
A Teledyne Technologies Company
TITLE: OUTLINE, DAT-924
DRAWING NUMBER: B-270-492
REVISION: A
DATE: 9/12/2011
SCALE: 1:4
SHEET 1 OF 1

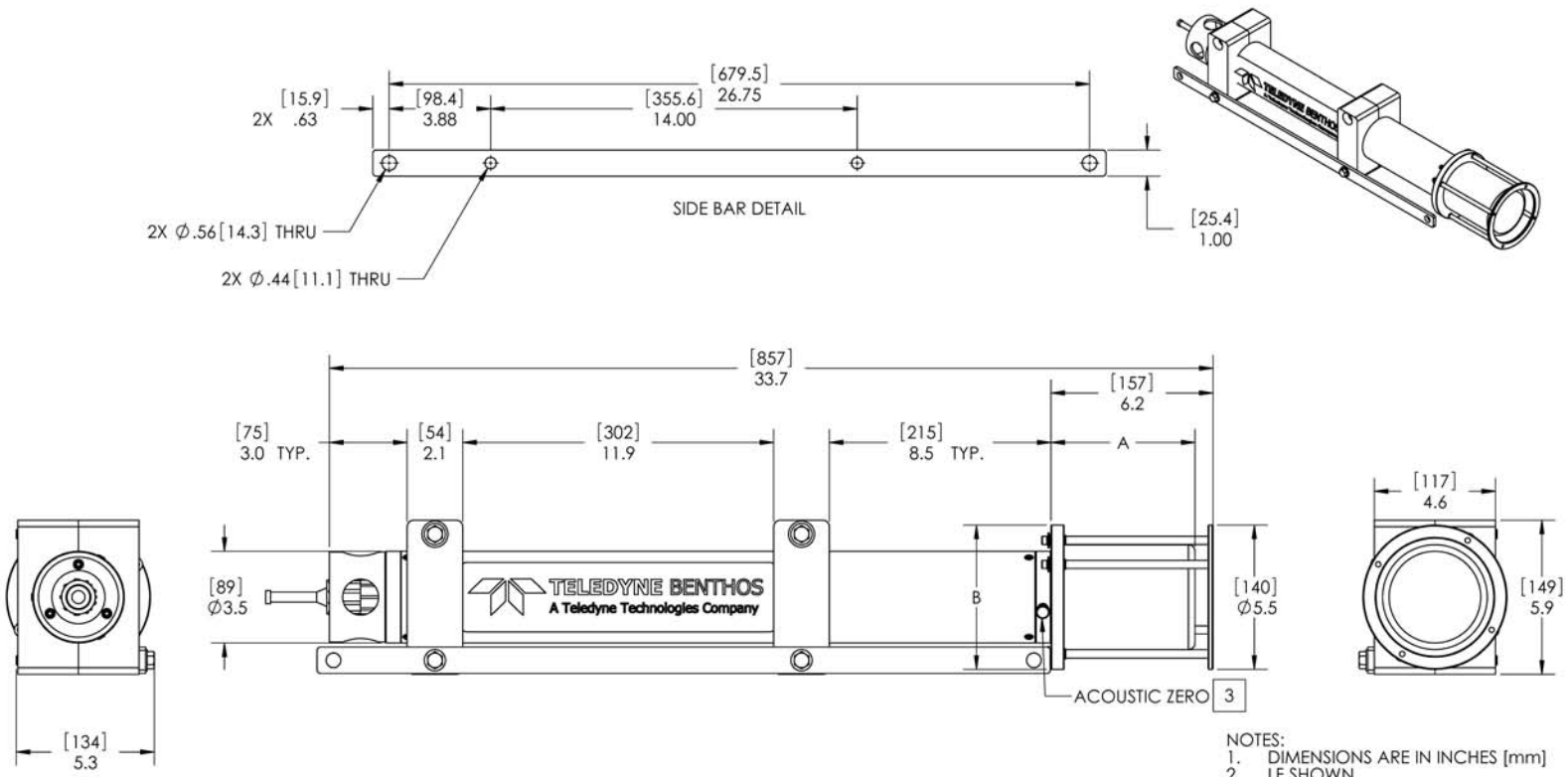

NOTES:
1. DIMENSIONS ARE IN INCHES [mm]
2. LF SHOWN
3. THE ON/OFF SWITCH IS THE USBL TRANSDUCER ACOUSTIC ZERO.

	WEIGHT IN AIR	WEIGHT IN WATER	A	B
LF	26 LBS [11.8 kg]	11 LBS [5.0 kg]	5.0 [127]	5.5 [140]
MF	26 LBS [11.8 kg]	12 LBS [5.4 kg]	6.2 [157]	6.2 [157]
BAND C	25 LBS [11.3 kg]	12 LBS [5.4 kg]	5.6 [142]	6.2 [157]

DATE	REV.	ECO#	DESCRIPTION	AUTH.	DR.	CK.
9/12/2011	A		RELEASED	WRB	RDB	BJ

TOLERANCES EXCEPT AS NOTED
DECIMAL: .X ± .015, .XX ± .010, .XXX ± .005
FRACTIONAL: ± 1/64 HOLE SIZE, ± 1/64 HOLE LOCATION, ± 1/32 GENERAL
ANGULAR: ± 1°
BREAK SHARP EDGES EXCEPT AS NOTED TO: R .010
ALL SURFACES EXCEPT AS NOTED 63

PROPRIETARY
THIS DOCUMENT AND THE INFORMATION CONTAINED THEREIN IS PROPRIETARY TO TELEDYNE BENTHOS, INC. AND MAY NOT BE USED, REPRODUCED OR DISCLOSED WITHOUT THE EXPRESS WRITTEN CONSENT OF TELEDYNE BENTHOS, INC. 49 - EDGERTON DR. - NORTH FALMOUTH, MA 02556

CAGE CODE: 26858
DRAWN BY: RICH BUSER
CHECKED BY: B. JOSEPH
AUTH. BY: WRB
FILE NAME: B-270-489RA

TELEDYNE BENTHOS
A Teledyne Technologies Company
TITLE: OUTLINE, DAT-925
DRAWING NUMBER: B-270-489
REVISION: A
DATE: 9/12/2011
SCALE: 1:4
SHEET 1 OF 1

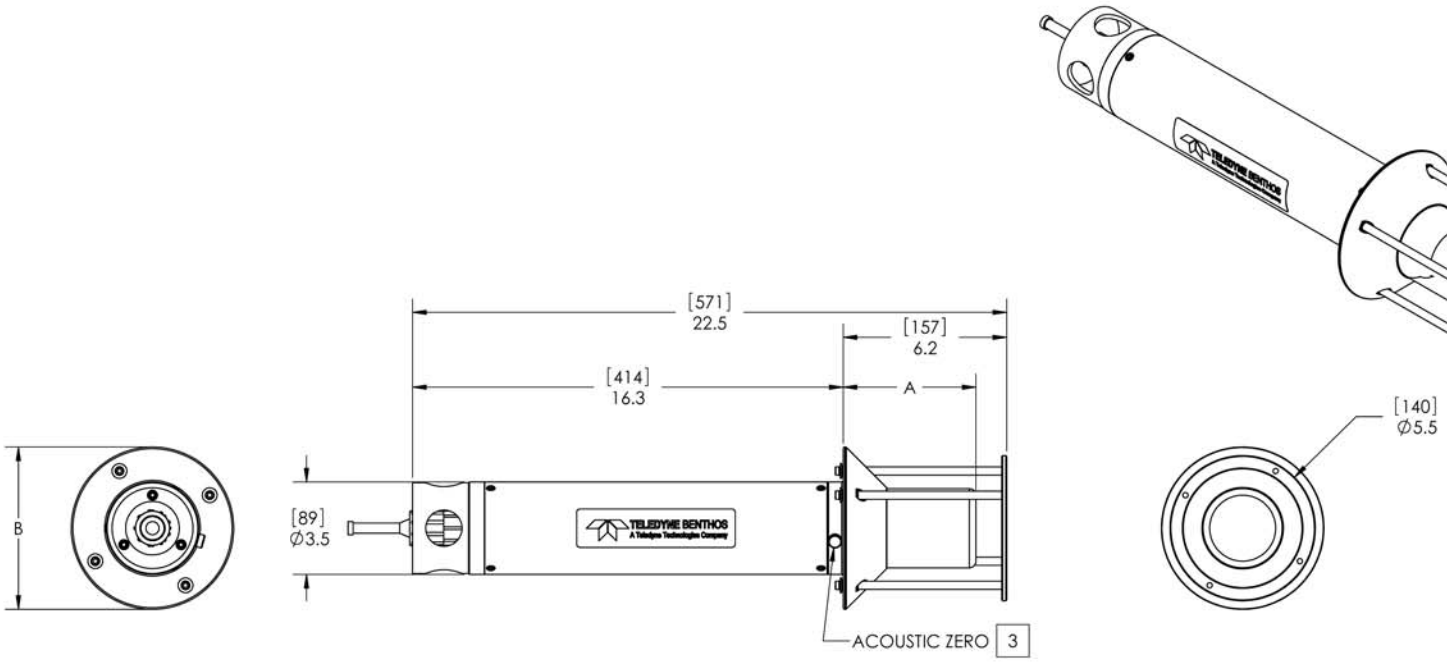

NOTES:
1. DIMENSIONS ARE IN INCHES [mm]
2. BAND C SHOWN
3. THE ON/OFF SWITCH IS THE USBL TRANSDUCER ACOUSTIC ZERO.

	WEIGHT IN AIR	WEIGHT IN WATER	A	B
LF	13 LBS [5.9 kg]	5 LBS [2.3 kg]	5.0 [127]	5.5 [140]
MF	14 LBS [6.4 kg]	5 LBS [2.3 kg]	6.2 [157]	6.2 [157]
BAND C	14 LBS [6.4 kg]	5 LBS [2.3 kg]	5.6 [142]	6.2 [157]

DATE	REV.	ECO#	DESCRIPTION	AUTH.	DR.	CK.
9/12/2011	A		RELEASED	WRB	RDB	BJ

TOLERANCES EXCEPT AS NOTED
DECIMAL: .X ± .015, .XX ± .010, .XXX ± .005
FRACTIONAL: ± 1/64 HOLE SIZE, ± 1/64 HOLE LOCATION, ± 1/32 GENERAL
ANGULAR: ± 1°
BREAK SHARP EDGES EXCEPT AS NOTED TO: R .010
ALL SURFACES EXCEPT AS NOTED 63

PROPRIETARY
THIS DOCUMENT AND THE INFORMATION CONTAINED THEREIN IS PROPRIETARY TO TELEDYNE BENTHOS, INC. AND MAY NOT BE USED, REPRODUCED OR DISCLOSED WITHOUT THE EXPRESS WRITTEN CONSENT OF TELEDYNE BENTHOS, INC. 49 - EDGERTON DR. - NORTH FALMOUTH, MA 02556

CAGE CODE: 26858
DRAWN BY: RICH BUSER
CHECKED BY: B. JOSEPH
AUTH. BY: WRB
FILE NAME: B-270-495RA

TELEDYNE BENTHOS
A Teledyne Technologies Company

TITLE: OUTLINE, DAT-926
DRAWING NUMBER: B-270-495
REVISION: A
DATE: 9/12/2011
SCALE: 1:4
SHEET 1 OF 1

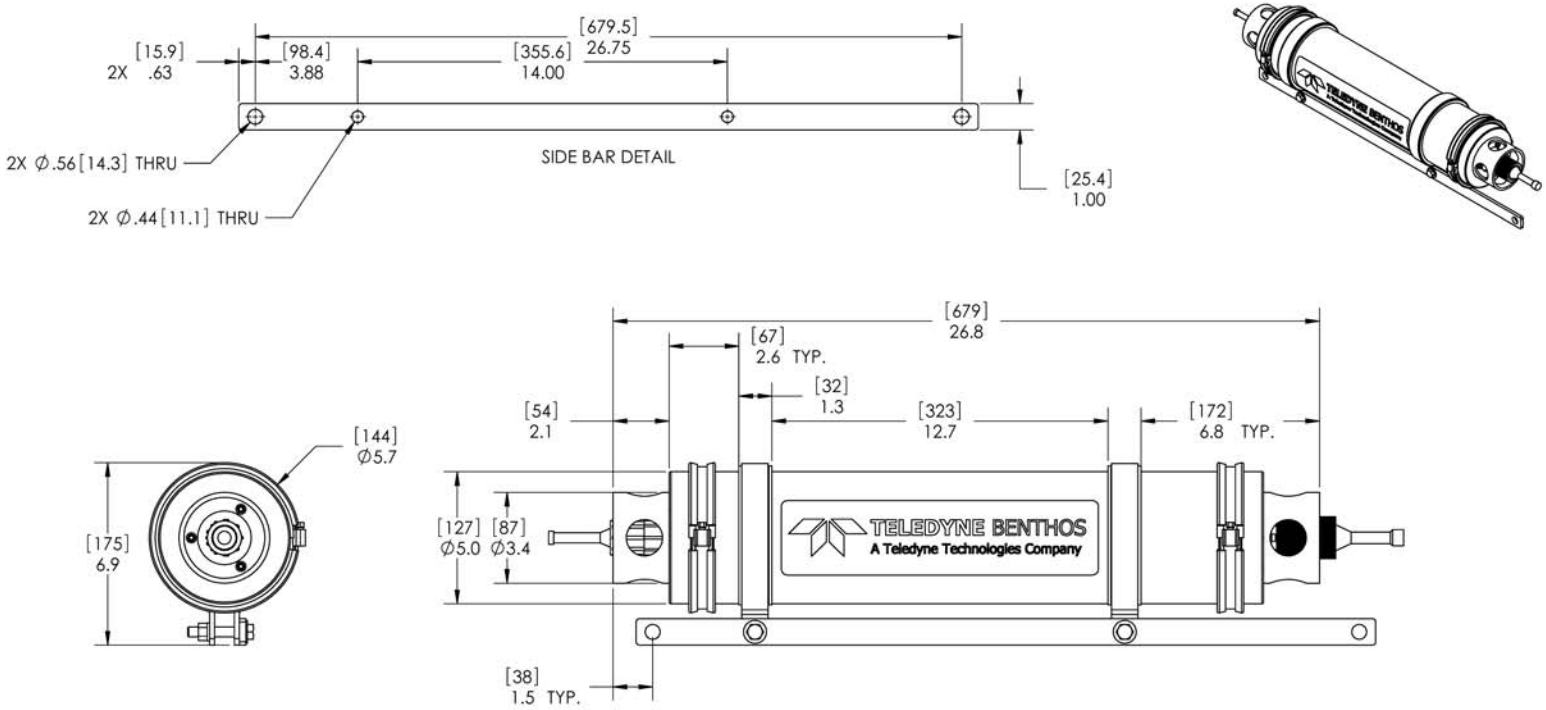

NOTES:
1. DIMENSIONS ARE IN INCHES [mm]
2. WEIGHT IN AIR: 36 LBS [16.3 kg]
3. WEIGHT IN WATER: 17 LBS [7.7 kg]

DATE	REV.	ECO#	DESCRIPTION	AUTH.	DR.	CK.
9/12/2011	A		RELEASED	WRB	RDB	BJ

TOLERANCES EXCEPT AS NOTED
DECIMAL: .X ± .015, .XX ± .010, .XXX ± .005
FRACTIONAL: ± 1/64 HOLE SIZE, ± 1/64 HOLE LOCATION, ± 1/32 GENERAL
ANGULAR: ± 1°
BREAK SHARP EDGES EXCEPT AS NOTED TO: R .010
ALL SURFACES EXCEPT AS NOTED: 63

PROPRIETARY

THIS DOCUMENT AND THE INFORMATION CONTAINED THEREIN IS PROPRIETARY TO TELEDYNE BENTHOS, INC. AND MAY NOT BE USED, REPRODUCED OR DISCLOSED WITHOUT THE EXPRESS WRITTEN CONSENT OF TELEDYNE BENTHOS, INC. 49 - EDGERTON DR. - NORTH FALMOUTH, MA 02556

CAGE CODE: 26858
DRAWN BY: RICH BUSER
CHECKED BY: B. JOSEPH
AUTH. BY: WRB
FILE NAME: B-270-494RA

TELEDYNE BENTHOS
A Teledyne Technologies Company

TITLE: OUTLINE, DAT-964
DRAWING NUMBER: B-270-494
REVISION: A
DATE: 9/12/2011
SCALE: 1:4
SHEET 1 OF 1

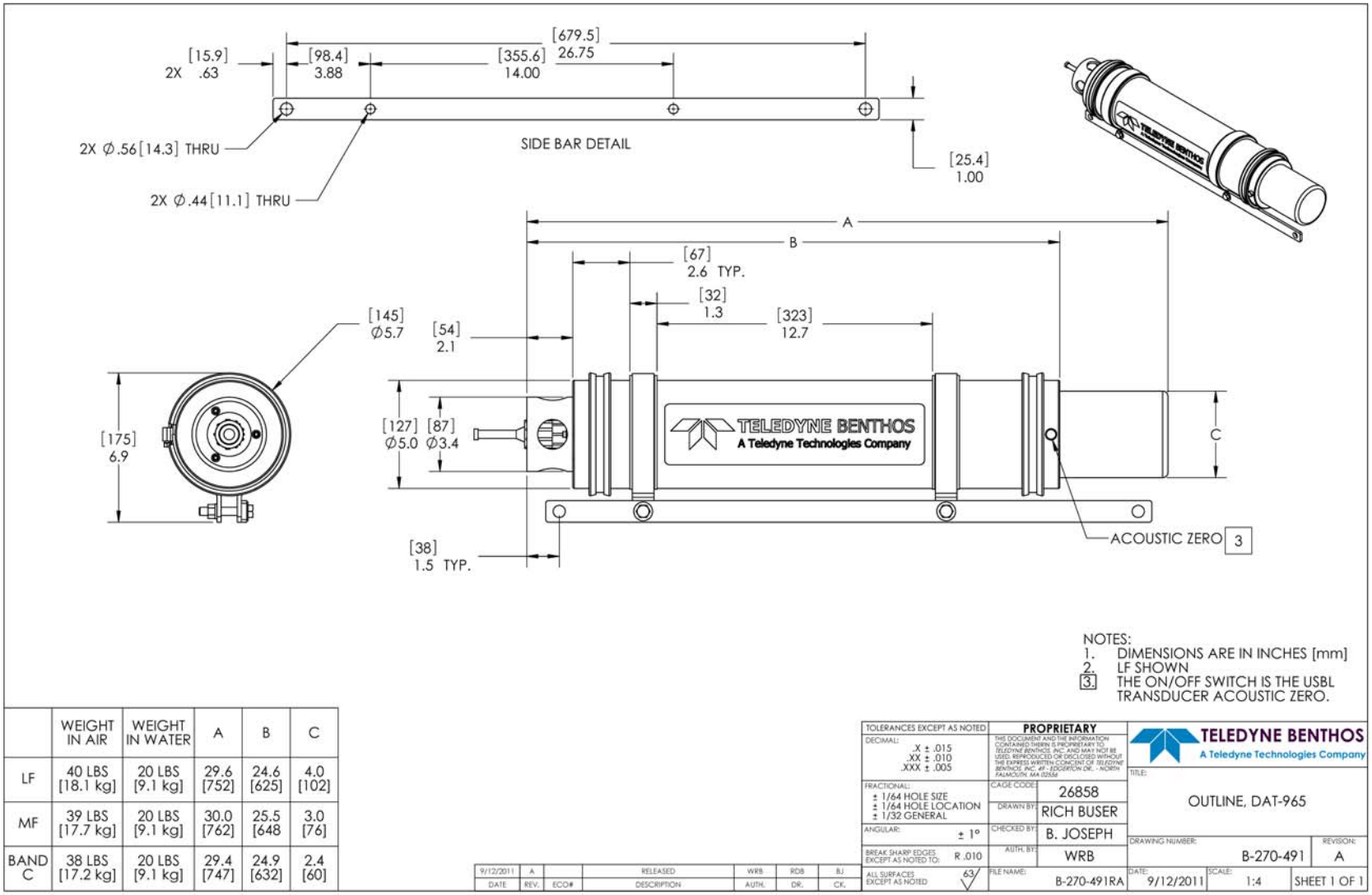

	WEIGHT IN AIR	WEIGHT IN WATER	A	B	C
LF	40 LBS [18.1 kg]	20 LBS [9.1 kg]	29.6 [752]	24.6 [625]	4.0 [102]
MF	39 LBS [17.7 kg]	20 LBS [9.1 kg]	30.0 [762]	25.5 [648	3.0 [76]
BAND C	38 LBS [17.2 kg]	20 LBS [9.1 kg]	29.4 [747]	24.9 [632]	2.4 [60]

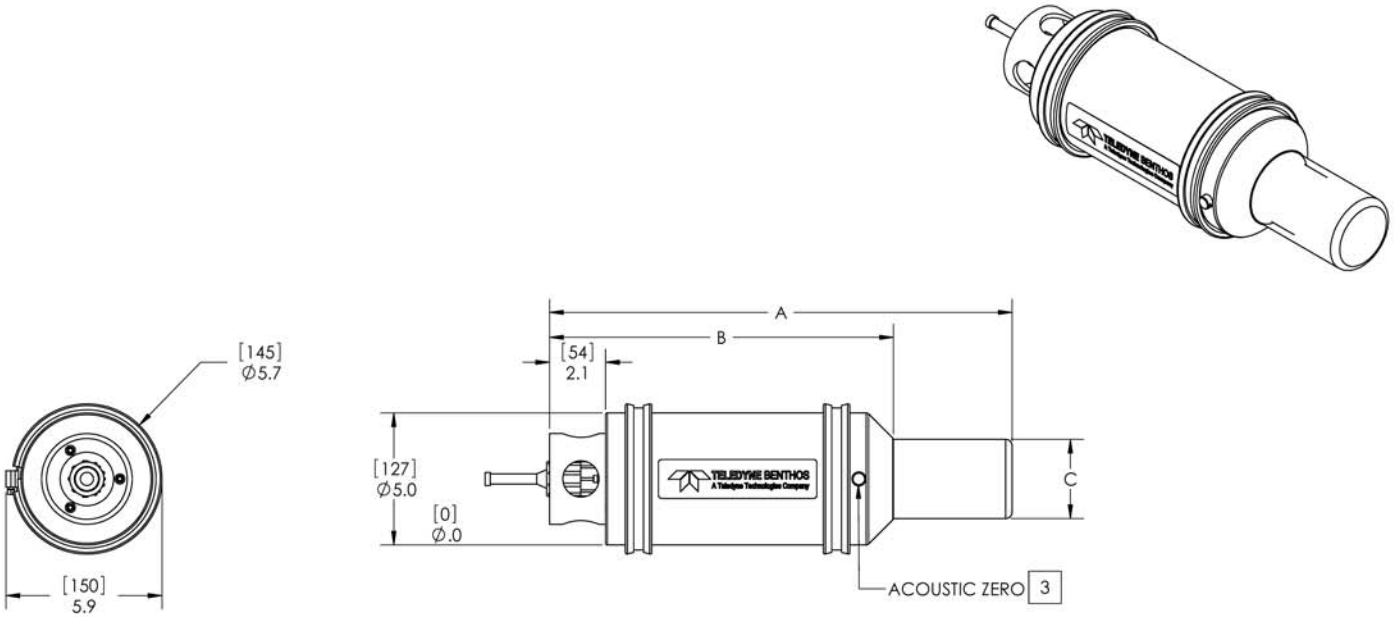

NOTES:
1. DIMENSIONS ARE IN INCHES [mm]
2. MF SHOWN
3. THE ON/OFF SWITCH IS THE USBL TRANSDUCER ACOUSTIC ZERO.

	WEIGHT IN AIR	WEIGHT IN WATER	A	B	C
LF	18 LBS [8.2 kg]	8 LBS [3.6 kg]	17.1 [434]	12.1 [307]	4.0 [102]
MF	17 LBS [7.7 kg]	8 LBS [3.6 kg]	17.5 [444]	13.0 [330]	3.0 [76]
BAND C	16 LBS [7.3 kg]	7 LBS [3.2 kg]	16.9 [429]	12.4 [315]	2.4 [60]

DATE	REV.	ECO#	DESCRIPTION	AUTH.	DR.	CK.
9/12/2011	A		RELEASED	WRB	RDB	BJ

TOLERANCES EXCEPT AS NOTED
DECIMAL: .X ± .015, .XX ± .010, .XXX ± .005
FRACTIONAL: ± 1/64 HOLE SIZE, ± 1/64 HOLE LOCATION, ± 1/32 GENERAL
ANGULAR: ± 1°
BREAK SHARP EDGES EXCEPT AS NOTED TO: R .010
ALL SURFACES EXCEPT AS NOTED 63

PROPRIETARY
THIS DOCUMENT AND THE INFORMATION CONTAINED THERIN IS PROPRIETARY TO TELEDYNE BENTHOS, INC. AND MAY NOT BE USED, REPRODUCED OR DISCLOSED WITHOUT THE EXPRESS WRITTEN CONCENT OF TELEDYNE BENTHOS, INC. 49 - EDGERTON DR. - NORTH FALMOUTH, MA 02556

CAGE CODE: 26858
DRAWN BY: RICH BUSER
CHECKED BY: B. JOSEPH
AUTH. BY: WRB
FILE NAME: B-270-497RA

TELEDYNE BENTHOS
A Teledyne Technologies Company
TITLE: OUTLINE, DAT-966
DRAWING NUMBER: B-270-497
REVISION: A
DATE: 9/12/2011
SCALE: 1:4
SHEET 1 OF 1

T/R PC BOARD

J1 - TRANSDUCER CONNECTION
J3 - POWER IN
J4 - ON/OFF SWITCH (CUSTOMER SUPPLIED)
J7 - 4-CHAN RECEIVER PC BOARD CONNECTION

DSP PC BOARD

J3 - COMPASS PC BOARD CONNECTION
J5 - COPROCESSOR/SD CARD
J7 - SERIAL INTERFACE - PART 1
J8 - SERIAL INTERFACE - PART 2

4-CHAN RECEIVER PC BOARD

J2 - T/R PC BOARD CONNECTION
J8 - TRANSDUCER CONNECTION
J14 - TRANSDUCER CONNECTION

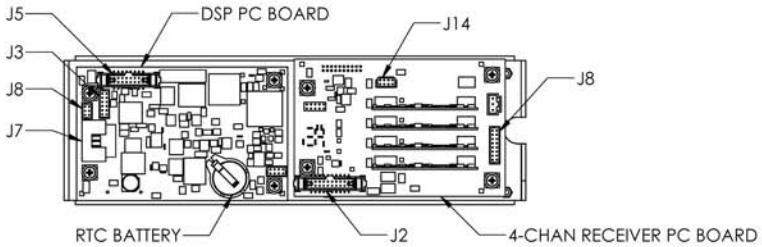

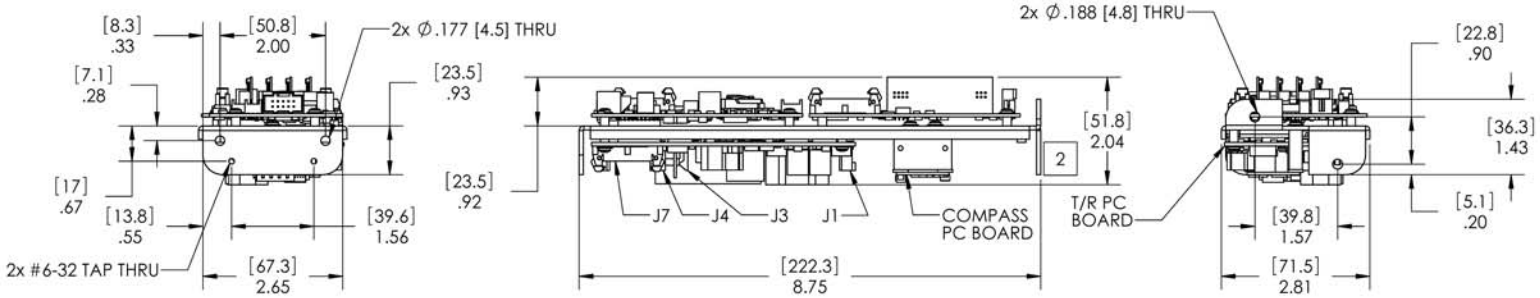

NOTES:

1. DIMENSIONS GIVEN IN INCHES [mm]
2. THIS SURFACE MUST BE MOUNTED TO THERMALLY CONDUCTIVE SURFACE FOR PROPER HEAT SINKING.

DATE	REV.	ECO#	DESCRIPTION	AUTH.	DR.	CK.
08/15/11	A		RELEASED	WRB	RDB	BJ

TOLERANCES EXCEPT AS NOTED
DECIMAL: .X ± .015, .XX ± .010, .XXX ± .005
FRACTIONAL: ± 1/64 HOLE SIZE, ± 1/64 HOLE LOCATION, ± 1/32 GENERAL
ANGULAR: ± 1°
BREAK SHARP EDGES EXCEPT AS NOTED TO: R .010
ALL SURFACES EXCEPT AS NOTED 63

PROPRIETARY
THIS DOCUMENT AND THE INFORMATION CONTAINED THEREIN IS PROPRIETARY TO TELEDYNE BENTHOS, INC. AND MAY NOT BE USED, REPRODUCED OR DISCLOSED WITHOUT THE EXPRESS WRITTEN CONCENT OF TELEDYNE BENTHOS, INC. 49 - EDGERTON DR. - NORTH FALMOUTH, MA 02556

CAGE CODE: 26858
DRAWN BY: RICH BUSER
CHECKED BY: B. JOSEPH
AUTH. BY: WRB
FILE NAME: B-270-484RA

TELEDYNE BENTHOS
A Teledyne Technologies Company

TITLE: OUTLINE, DAT-900, OEM BOARD SET
DRAWING NUMBER: B-270-484
REVISION: A
DATE: 8/15/2011
SCALE: 1:2
SHEET 1 OF 1

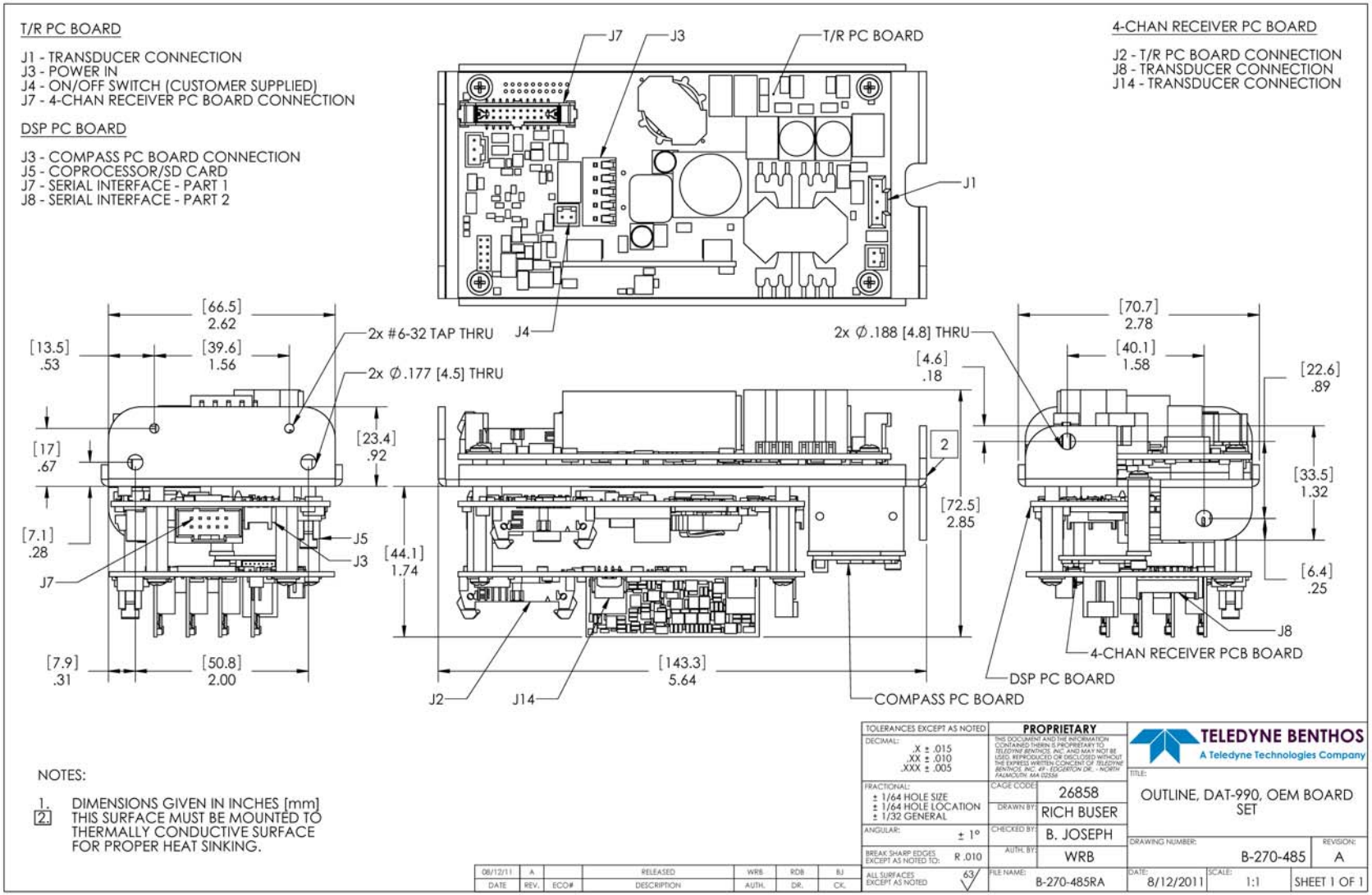
T/R PC BOARD
J1 - TRANSDUCER CONNECTION
J3 - POWER IN
J4 - ON/OFF SWITCH (CUSTOMER SUPPLIED)
J7 - 4-CHAN RECEIVER PC BOARD CONNECTION
DSP PC BOARD
J3 - COMPASS PC BOARD CONNECTION
J5 - COPROCESSOR/SD CARD
J7 - SERIAL INTERFACE - PART 1
J8 - SERIAL INTERFACE - PART 2
4-CHAN RECEIVER PC BOARD
J2 - T/R PC BOARD CONNECTION
J8 - TRANSDUCER CONNECTION
J14 - TRANSDUCER CONNECTION
J7
J3
T/R PC BOARD
J1
J4
[66.5] 2.62
[13.5] .53
[39.6] 1.56
2x #6-32 TAP THRU
2x Ø.177 [4.5] THRU
[17] .67
[23.4] .92
[7.1] .28
J5
J3
J7
[44.1] 1.74
[7.9] .31
[50.8] 2.00
2x Ø.188 [4.8] THRU
[4.6] .18
2
[72.5] 2.85
[143.3] 5.64
J2
J14
COMPASS PC BOARD
[70.7] 2.78
[40.1] 1.58
[22.6] .89
[33.5] 1.32
[6.4] .25
J8
4-CHAN RECEIVER PCB BOARD
DSP PC BOARD
NOTES:
1. DIMENSIONS GIVEN IN INCHES [mm]
2. THIS SURFACE MUST BE MOUNTED TO THERMALLY CONDUCTIVE SURFACE FOR PROPER HEAT SINKING.
08/12/11 A RELEASED WRB RDB BJ
DATE REV. ECO# DESCRIPTION AUTH. DR. CK.
TOLERANCES EXCEPT AS NOTED
DECIMAL: .X ± .015 .XX ± .010 .XXX ± .005
FRACTIONAL: ± 1/64 HOLE SIZE ± 1/64 HOLE LOCATION ± 1/32 GENERAL
ANGULAR: ± 1°
BREAK SHARP EDGES EXCEPT AS NOTED TO: R .010
ALL SURFACES EXCEPT AS NOTED 63
PROPRIETARY
THIS DOCUMENT AND THE INFORMATION CONTAINED THERIN IS PROPRIETARY TO TELEDYNE BENTHOS, INC. AND MAY NOT BE USED, REPRODUCED OR DISCLOSED WITHOUT THE EXPRESS WRITTEN CONCENT OF TELEDYNE BENTHOS, INC. 49 - EDGERTON DR. - NORTH FALMOUTH, MA 02556
CAGE CODE: 26858
DRAWN BY: RICH BUSER
CHECKED BY: B. JOSEPH
AUTH. BY: WRB
FILE NAME: B-270-485RA
TELEDYNE BENTHOS
A Teledyne Technologies Company
TITLE: OUTLINE, DAT-990, OEM BOARD SET
DRAWING NUMBER: B-270-485
REVISION: A
DATE: 8/12/2011
SCALE: 1:1
SHEET 1 OF 1

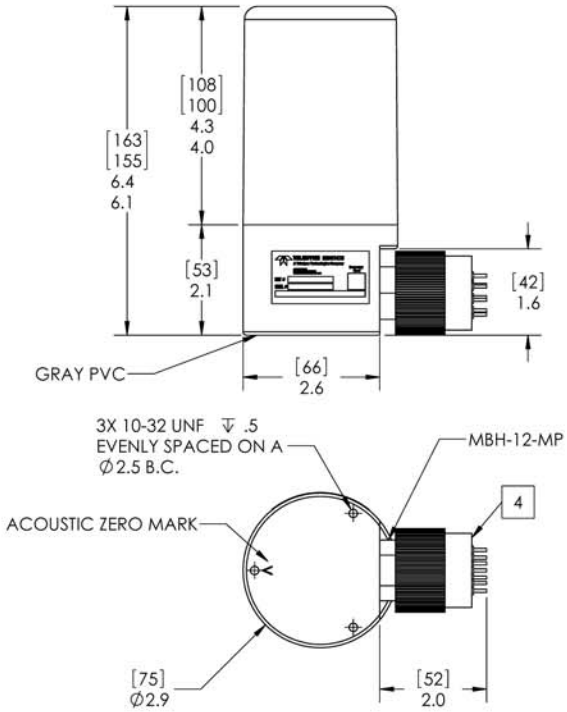

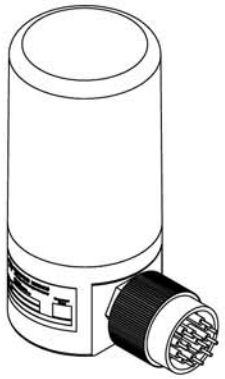

NOTES:
1. DIMENSIONS GIVEN IN INCHES [mm]
2. WEIGHT IN AIR: 2 LBS [.9 kg]
3. WEIGHT IN WATER: .5 LBS [.2 kg]
4. MF TRANSDUCER USES BLUE LOCKING SLEEVE. B/C TRANSDUCER USES RED LOCKING SLEEVE.

DATE	REV.	ECO#	DESCRIPTION	AUTH.	DR.	CK.
07/13/11	A		RELEASED	WRB	RDB	BJ

TOLERANCES EXCEPT AS NOTED
DECIMAL: .X ± .015, .XX ± .010, .XXX ± .005
FRACTIONAL: ± 1/64 HOLE SIZE, ± 1/64 HOLE LOCATION, ± 1/32 GENERAL
ANGULAR: ± 1°
BREAK SHARP EDGES EXCEPT AS NOTED TO: R .010
ALL SURFACES EXCEPT AS NOTED: 63

PROPRIETARY

THIS DOCUMENT AND THE INFORMATION CONTAINED THEREIN IS PROPRIETARY TO TELEDYNE BENTHOS, INC. AND MAY NOT BE USED, REPRODUCED OR DISCLOSED WITHOUT THE EXPRESS WRITTEN CONSENT OF TELEDYNE BENTHOS, INC. 49 - EDGERTON DR. - NORTH FALMOUTH, MA 02556

CAGE CODE: 26858
DRAWN BY: RICH BUSER
CHECKED BY: B. JOSEPH
AUTH. BY: WRB
FILE NAME: B-270-471RA

TELEDYNE BENTHOS
A Teledyne Technologies Company

TITLE: OUTLINE, DAT MF/C RA RMT XDCR

DRAWING NUMBER: B-270-471
REVISION: A
DATE: 7/13/2011
SCALE: 1:2
SHEET 1 OF 1

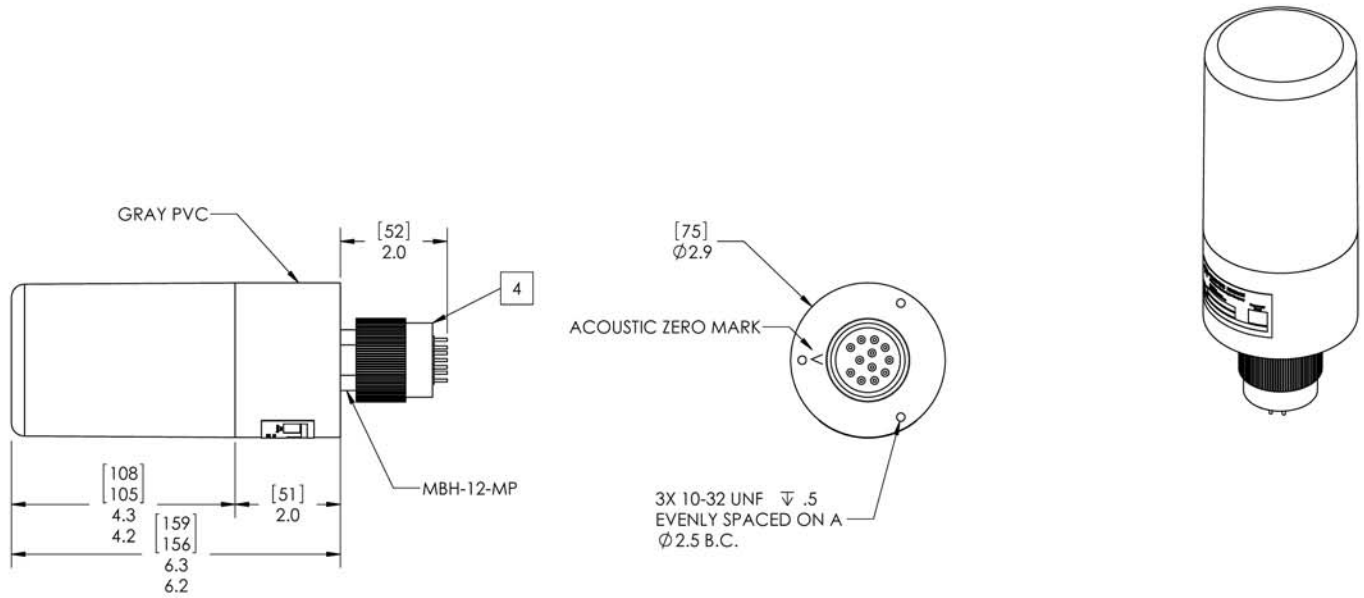

NOTES:
1. DIMENSIONS GIVEN IN INCHES [mm]
2. WEIGHT IN AIR: 2 LBS [.9 kg]
3. WEIGHT IN WATER: .5 LBS [.2 kg]
4. MF TRANSDUCER USES BLUE LOCKING SLEEVE. B/C TRANSDUCER USES RED LOCKING SLEEVE.

DATE	REV.	ECO#	DESCRIPTION	AUTH.	DR.	CK.
07/13/11	A		RELEASED	WRB	RDB	BJ

TOLERANCES EXCEPT AS NOTED
DECIMAL: .X ± .015, .XX ± .010, .XXX ± .005
FRACTIONAL: ± 1/64 HOLE SIZE, ± 1/64 HOLE LOCATION, ± 1/32 GENERAL
ANGULAR: ± 1°
BREAK SHARP EDGES EXCEPT AS NOTED TO: R .010
ALL SURFACES EXCEPT AS NOTED 63

PROPRIETARY

THIS DOCUMENT AND THE INFORMATION CONTAINED THEREIN IS PROPRIETARY TO TELEDYNE BENTHOS, INC. AND MAY NOT BE USED, REPRODUCED OR DISCLOSED WITHOUT THE EXPRESS WRITTEN CONCENT OF TELEDYNE BENTHOS, INC. 49 - EDGERTON DR. - NORTH FALMOUTH, MA 02556

CAGE CODE: 26858
DRAWN BY: RICH BUSER
CHECKED BY: B. JOSEPH
AUTH. BY: WRB
FILE NAME: B-270-477RA

TELEDYNE BENTHOS
A Teledyne Technologies Company

TITLE: OUTLINE, DAT MF/C STR RMT XDCR
DRAWING NUMBER: B-270-477
REVISION: A
DATE: 7/13/2011
SCALE: 1:2
SHEET 1 OF 1

8 Transponder Spares, Accessories and Part Number Designator

This section comprises lists of the Teledyne Benthos DAT-900 Series Directional Acoustic Transponder spares and accessories. Also included is a transponder part number designator which provides an easy method for designating the specific part number for a transponder when placing an order.

Transponder Spares and Accessories

Table 8-1 through Table 8-5 in the following pages provide part number, descriptions and required quantities for spares and accessories for the DAT-900, DAT-910, DAT-920, and DAT-960 Series Acoustic Telemetry Modems.

Table 8-1 DAT-910 Series Directional Acoustic Transponder Spares

PART NUMBER	DESCRIPTION	QTY PER UNIT
D-270-102	378 watt-hour alkaline battery pack	1
000683	O-ring, Radial (Parker 2-233 N0674-70)	4
B-270-408	16-Pin Programming Cable	1
008336	Connector, Dummy Plug	1
005855	Connector, Locking Sleeve	1
008484	Transducer, Protective Cage	1

.

Table 8-2 DAT-920 Series Directional Acoustic Transponder Spares

PART NUMBER	DESCRIPTION	QTY PER UNIT
D-270-102	378 Watt-hour Alkaline Battery Pack	1
000683	O-Ring, Radial (Parker 2-233 N0674-70)	2
B-270-408	16-Pin Programming Cable	1
008336	Connector, Dummy Plug	1
005855	Connector, Locking Sleeve	1
008484	Transducer, Protective Cage	1

Table 8-3 DAT-960 Series Directional Acoustic Transponder Spares

PART NUMBER	DESCRIPTION	QTY PER UNIT
001402	294 Watt-hour Alkaline Battery Pack	2
000679	O-Ring, Radial (Parker 2-241 N0674-70)	2
000677	O-Ring, Face (Parker 2-245 N0674-70)	2
B-270-408	16-Pin Programming Cable	1
008336	Connector, Dummy Plug	1
005855	Connector, Locking Sleeve	1
008484	Transducer, Protective Cage	1

Table 8-4 DAT-900 Series Directional Acoustic Transponder Spares

PART NUMBER	DESCRIPTION	QTY PER UNIT
014720	Transducer, Pigtail	1
007984	Cable, Power 12-36 VDC	1
007986	Cable, Serial Interface (Serial Port 1)	1
B-270-472-1	Cable, J8-4Ch Connection	1
B-270-472-2	Cable, J14-4Ch Connection	1

Table 8-5 Cables

PART NUMBER	DESCRIPTION	QTY PER UNIT
B-270-408	16-Pin Programming Cable	1
B-270-415-2	16-Pin Pigtail Cable, 2-Meter	1
B-270-415-3	16-Pin Pigtail Cable, 3-Meter	1
B-270-415-5	16-Pin Pigtail Cable, 5-Meter	1
B-270-415-10	16-pin pigtail cable, 10-Meter	1
B-270-415-25	16-pin pigtail cable, 25-Meter	1
B-270-415-50	16-pin pigtail cable, 50-Meter	1
B-270-415-100	16-pin pigtail cable, 100-Meter	1
B-270-415-200	16-pin pigtail cable, 200-Meter	1

Transponder Part Number Designation

The DAT-900 Series Directional Acoustic Transponders use an identification number e that allows the model number to be used as the part number. This method simplifies the ordering and support processes. To designate the part number for a transponder, follow the legend shown in Figure 8-1.

DAT - A B C - D - E

E
- **B** - Dual serial port enabled
- **M** - Multiple channel receive capability enabled
- **P** - PSK
- **C** - Serial compass

D
- **LF4** - Low frequency (9–14 kHz) USBL transducer
- **LF5** - Low frequency (9 - 14 kHz) right angle USBL transducer
- **MF4** - Medium frequency (16 - 21 kHz) USBL transducer
- **MF5** - Medium frequency (16 - 21 kHz) right angle USBL transducer
- **BC4** - Interoperability Band C (22 - 27 kHz) USBL transducer
- **BC5** - Interoperability Band C (22 - 27 kHz) right angle USBL transducer

C
- **0** - Transducer not included
- **3** - Remote transducer with no internal battery
- **4** - Remote transducer with internal battery
- **5** - Integrated transducer with internal battery
- **6** - Integrated transducer with no internal battery

B
- **0** - Original equipment manufacturer printed circuit board (OEM PCB) electronics, long chassis
- **9** - Original equipment manufacturer printed circuit board (OEM PCB) electronics, short chassis

A
- **1** - Polyvinyl chloride (PVC) housing material, depth rated to 500 meters (1640 feet)
- **2** - Aluminum housing material, depth rated to 2000 meters (6560 feet)
- **6** - Aluminum housing material, depth rated to 6000 meters (19,680 feet)
- **9** - True 4G

NOTE: Specification designators A through D are required, whereas specification designator E is for selected options.

Figure 8-1 DAT-900 Series Part Number Designator Legend