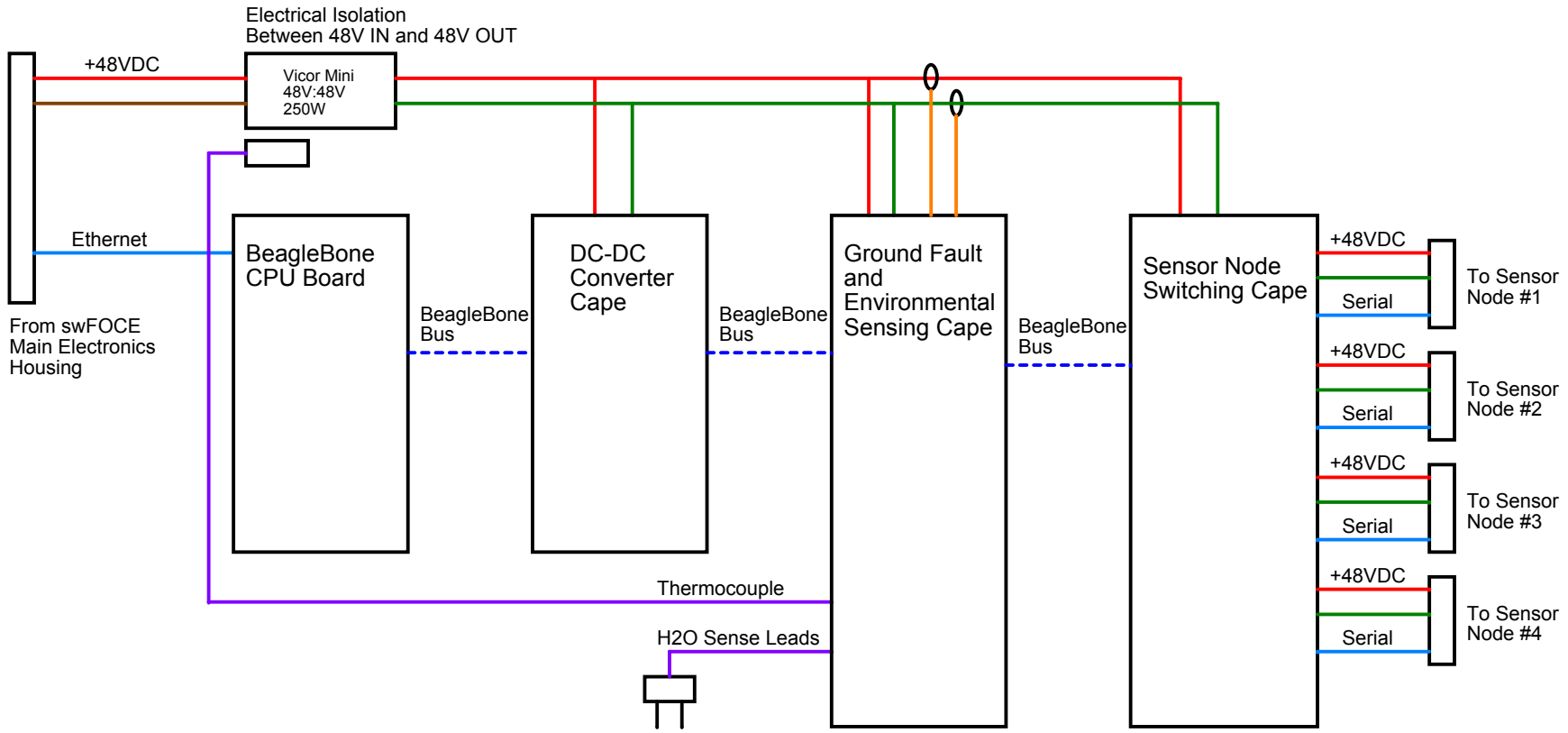

MONTEREY BAY AQUARIUM RESEARCH INSTITUTE
7700 SANDHOLDT ROAD
MOSS LANDING, CA 95039
(831) 775-1700 www.mbari.org
Copyright MBARI 2000

Title swFOCE Gateway Node Block Diagram				Number <Doc>
Size B	Engineer Chad Kecy	Layout <Layout Eng.>	Filename <Filename>	Rev B
	Date: Tuesday, March 03, 2015		Sheet 1 of 1	