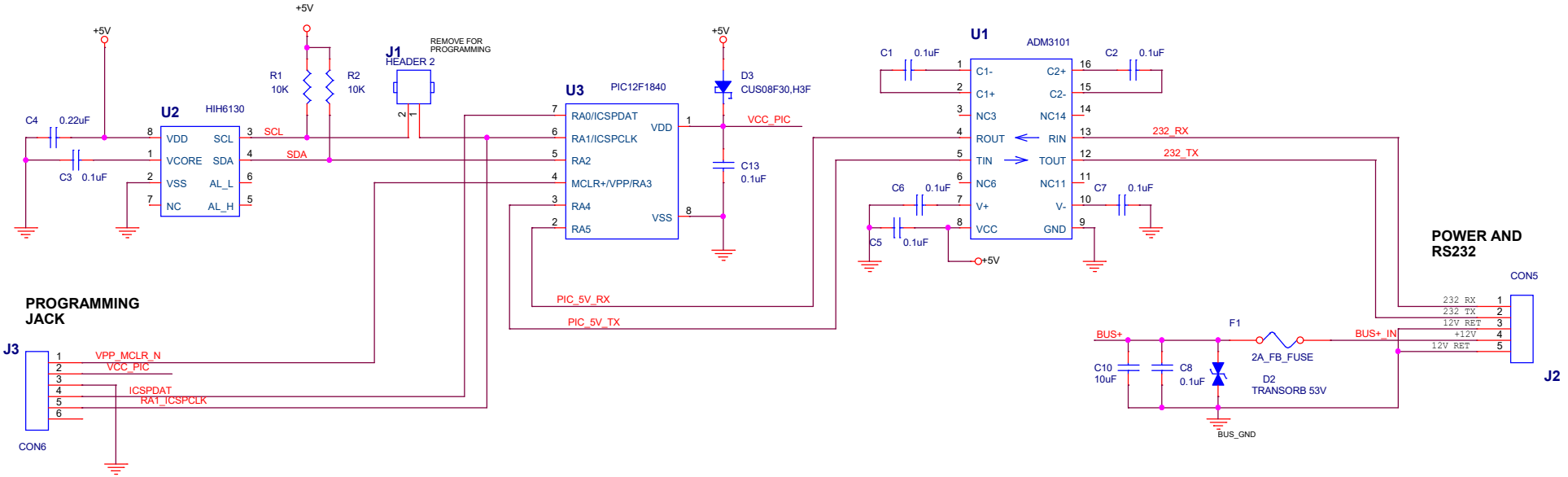

BUS VOLTAGE TO 5V

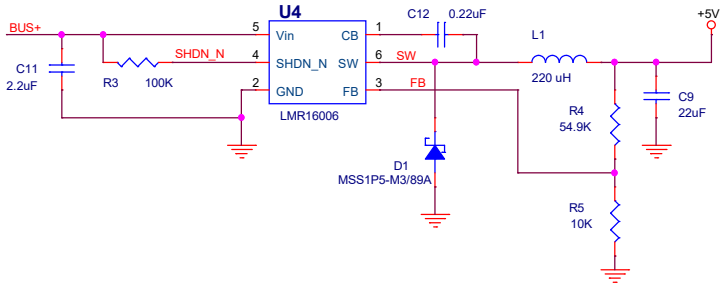

Title	SCH, AUV HUMIDITY/TEMP RS232	
Size B	Document Number 100221332	Rev B
Date: Monday, May 13, 2019	Sheet 1 of 1	