DeepPIV v3 Subastian Integration
Alternate Option 4/24/19

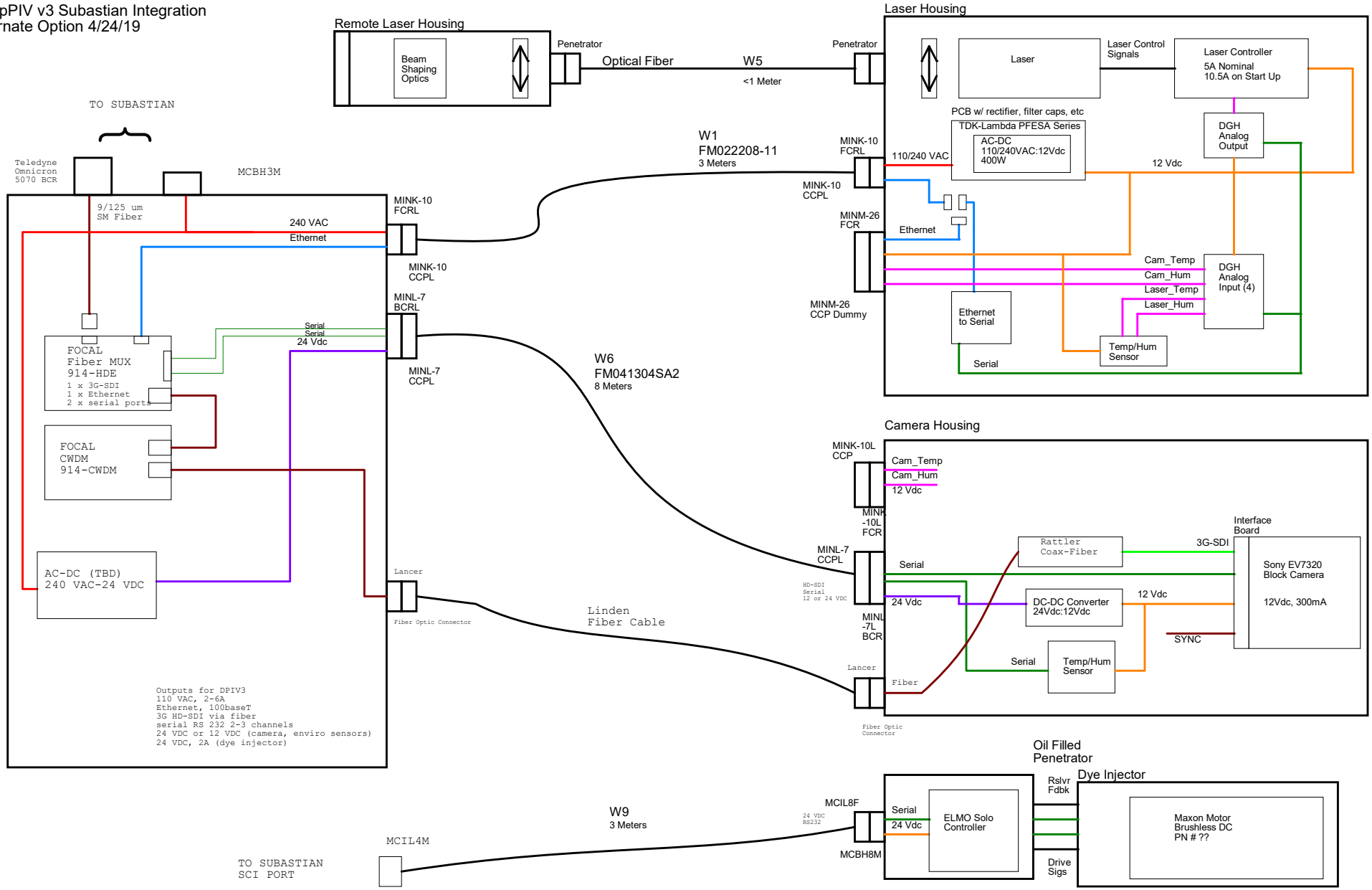

MONTEREY BAY AQUARIUM RESEARCH INSTITUTE
7700 SANDHOLDT ROAD
MOSS LANDING, CA 95039
(831) 775-1700 www.mbari.org

Copyright MBARI 2000

Title	DPIV3-Subastian Integration Can Block Option B		Number	100221328
Size C	Engineer Alana Sherman	Layout <Layout Eng.>	Filename <Filename>	Rev B
	Date: Monday, May 13, 2019		Sheet 1 of 1	