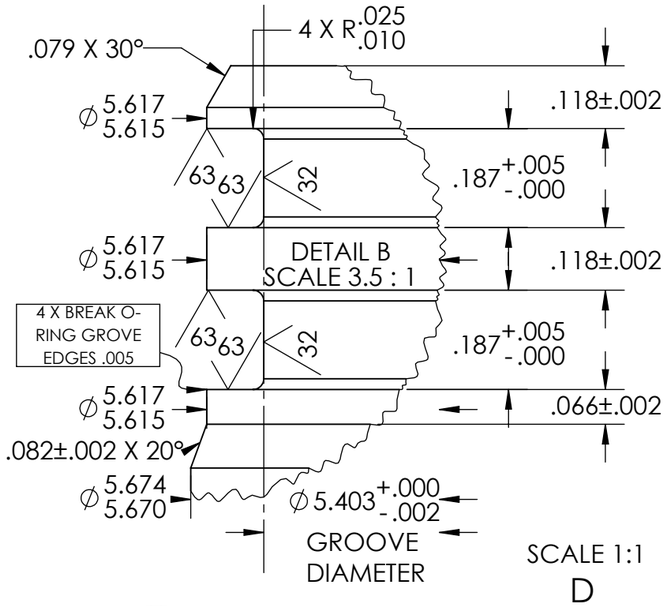

HARD ANODIZE AS PER MIL-A-8625, TYPE 3, CLASS 1 BLACK WITH DIACHROMATE SEAL SURFACE BUILD UP .0006 to .0010

DIMENSIONS HELD AFTER ANODIZING.

ANGULAR TOLERANCES FOR ONE PLACE DECIMAL: +-0.2°.

FOR USE WITH TWO PARKER N0497-70 2-253 O-RINGS

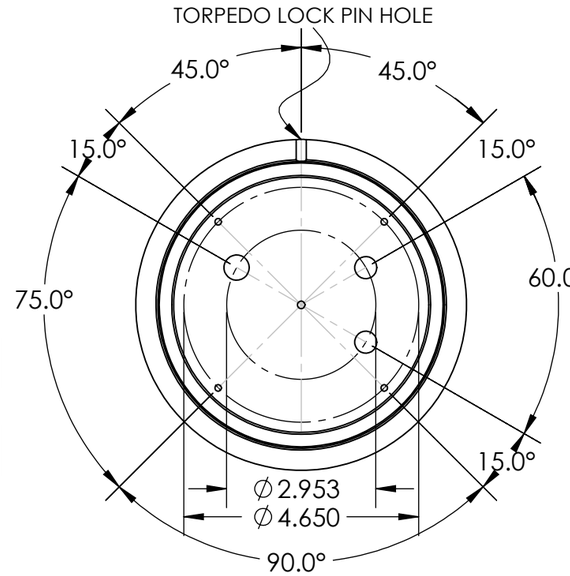

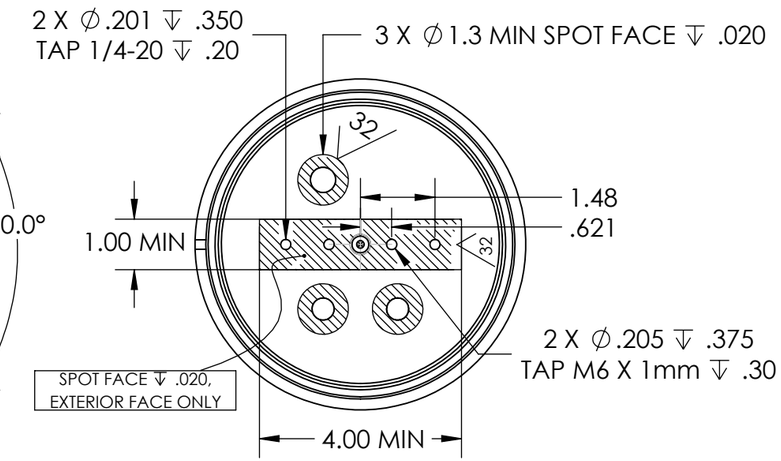

ABOVE VIEW IS EXTERIOR FACE OF HOUSING. HOLES ARE LOCATED ON .500 THICK WALL.

SCALE 1:1

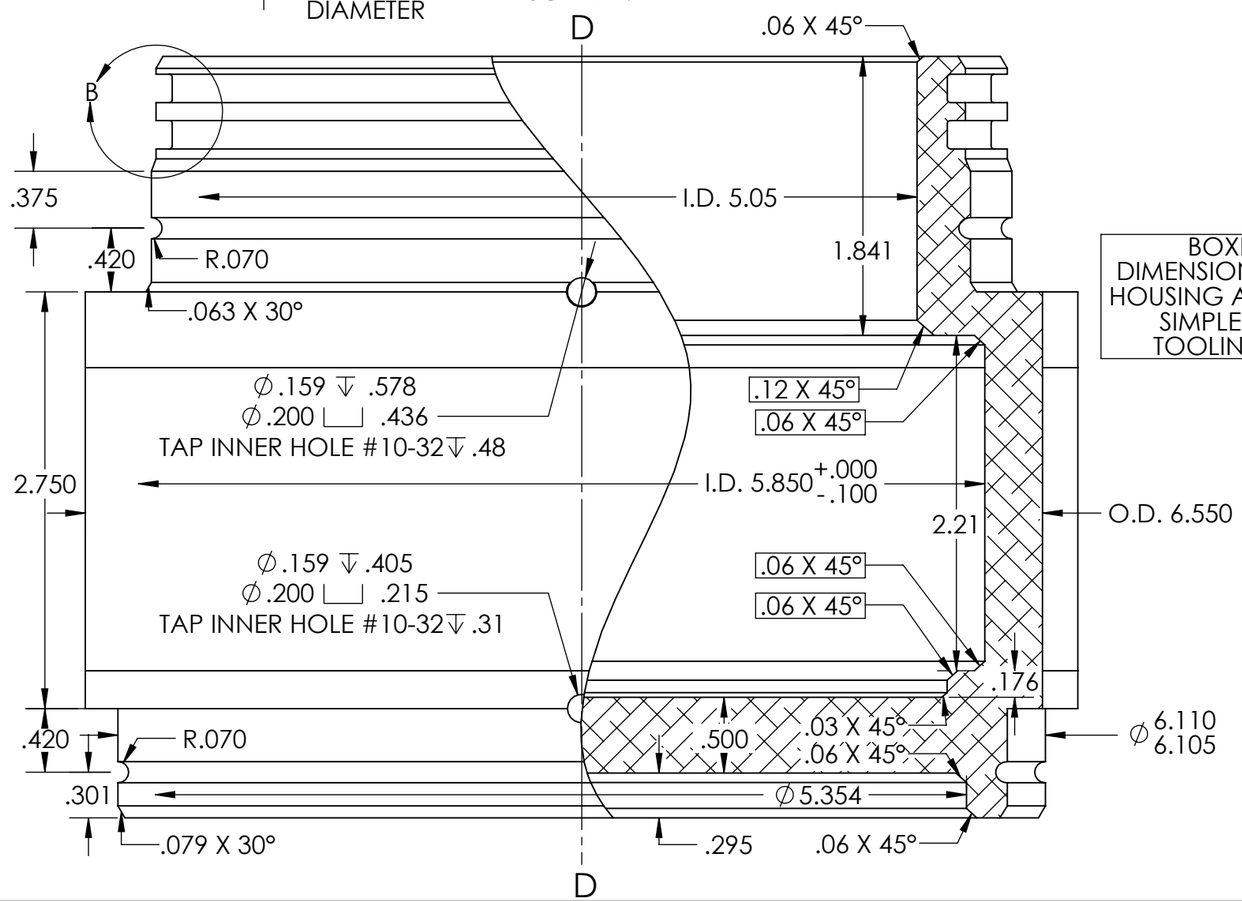

BOXED CHAMFER DIMENSIONS ON INTERIOR OF HOUSING ARE APPROXIMATES. SIMPLE RADIUS LEFT BY TOOLING IS SUFFICIENT.

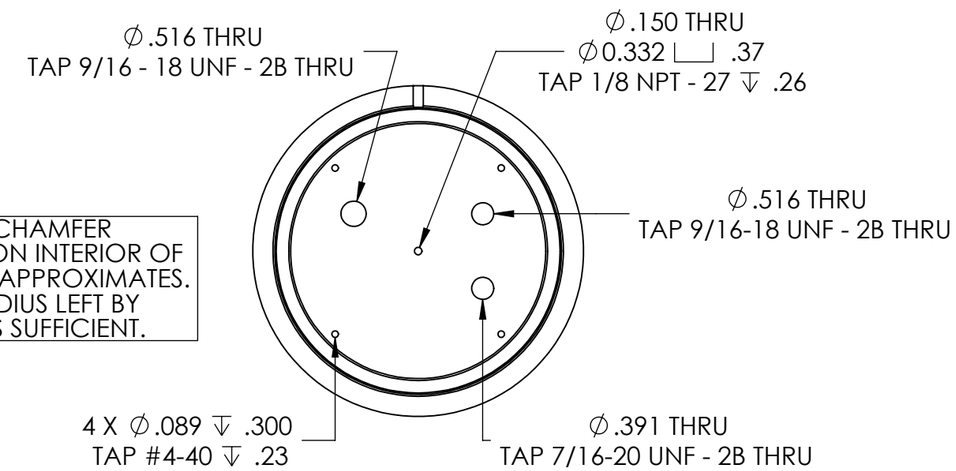

VIEW ABOVE IS INTERIOR FACE OF HOUSING. #4-40 BLIND HOLES SHOULD BE TAPPED FROM INTERIOR FACE, WHILE OTHER THREADED HOLES SHOULD BE TAPPED FROM EXTERIOR FACE

UNLESS OTHERWISE SPECIFIED:
1. DIMENSIONS ARE IN INCHES
2. DIMENSION LIMITS HELD AFTER ANODIZING
3. REMOVE BURRS AND SHARP EDGES .015 MAX
4. TOLERANCES FOR 1 PLACE DECIMAL: +-.1
5. TOLERANCES FOR 2 PLACE DECIMAL: +-.02
TOLERANCES FOR 3 PLACE DECIMAL: +-.005
6. ANGULAR TOLERANCES +- 1°
7. MACHINED DIAMETERS ON A COMMON CENTERLINE CONCENTRIC WITHIN .005

	NAME	DATE
DRAWN	E KURTEFF	8/24/17
CHECKED		

MONTEREY BAY AQUARIUM RESEARCH INSTITUTE

MBARI
7700 Sandholdt Rd.
Moss Landing, CA 95039
Phone: (831) 751-700

TITLE: ALUMINUM COMPUTE HOUSING

PROPRIETARY AND CONFIDENTIAL
THE INFORMATION CONTAINED IN THIS DRAWING IS THE SOLE PROPERTY OF MBARI. ANY REPRODUCTION IN PART OR AS A WHOLE WITHOUT THE WRITTEN PERMISSION OF MBARI IS PROHIBITED.

MATERIAL: 6061 T6 ALUMINUM ALLOY

FINISH: HARD ANODIZED, TYPE 3, CLASS 1

DO NOT SCALE DRAWING

SIZE	DWG. NO.	REV
B	Aluminum Compute Housing	2

SCALE: 1:3 | WEIGHT: | SHEET 1 OF 1