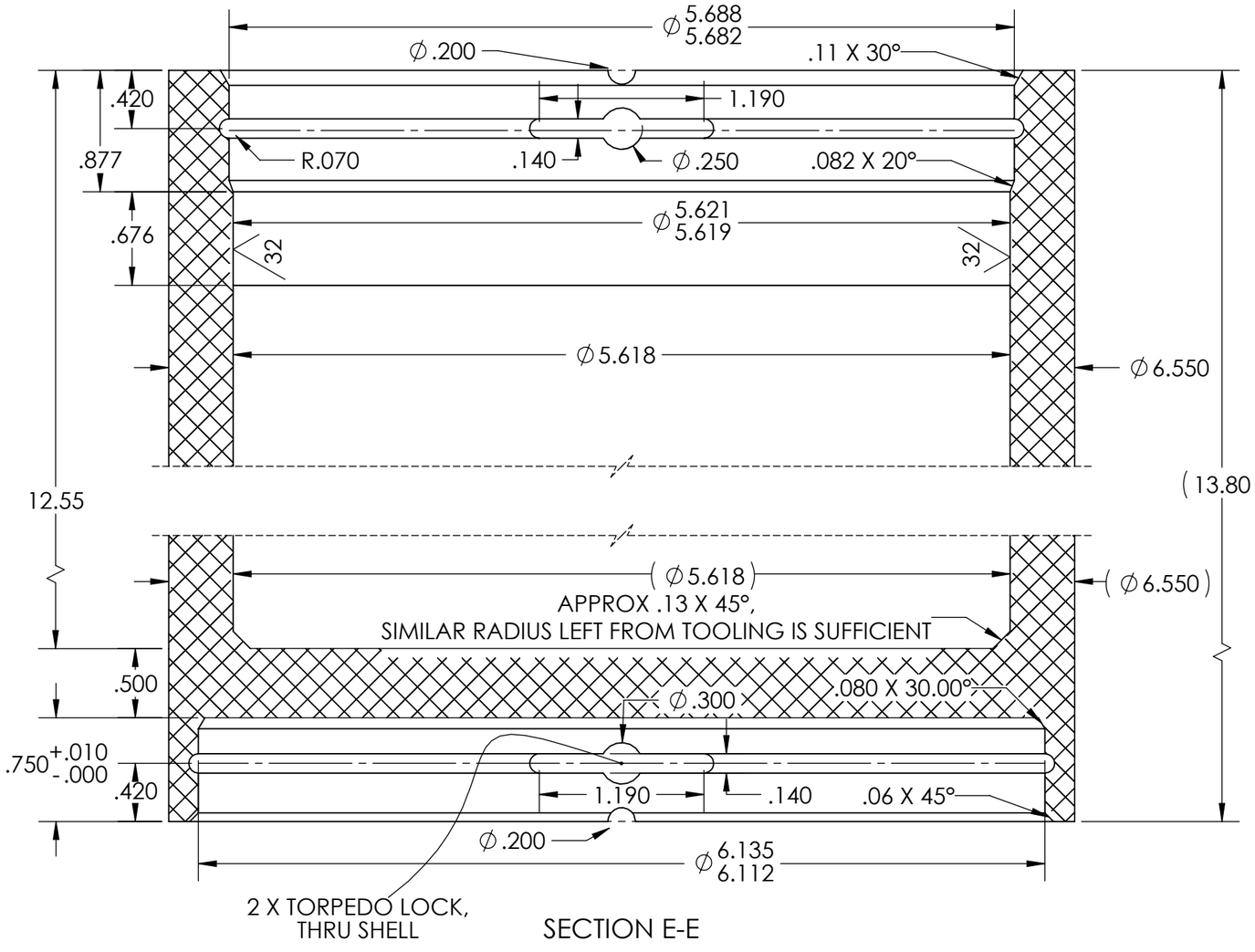

SECTION E-E

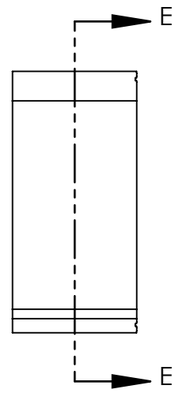

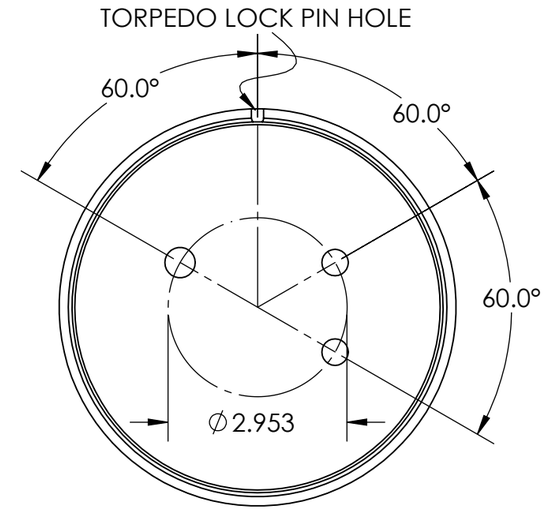

VIEW PRESENTED ABOVE IS EXTERIOR FACE. HOLES ARE THROUGH .500 THICK WALL

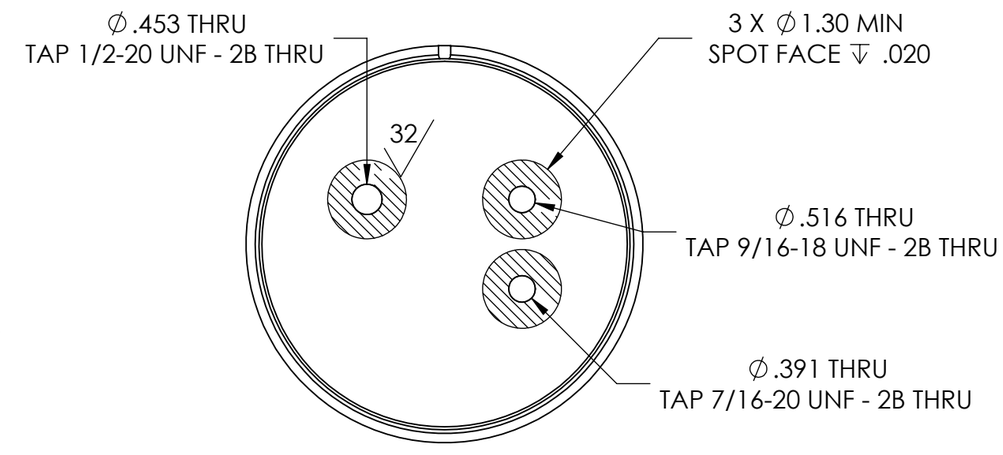

VIEWS PRESENTED ABOVE ARE SAME EXTERIOR FACE. HOLES SHOULD BE TAPPED FROM EXTERIOR FACE.

UNLESS OTHERWISE SPECIFIED:

1. DIMENSIONS ARE IN INCHES
2. REMOVE BURRS AND SHARP EDGES .015 MAX
3. TOLERANCES FOR 1 PLACE DECIMAL: +-.1
4. TOLERANCES FOR 2 PLACE DECIMAL: +-.02
TOLERANCES FOR 3 PLACE DECIMAL: +-.005
5. ANGULAR TOLERANCES +- 1°
6. MACHINED DIAMETERS ON A COMMON CENTERLINE CONCENTRIC WITHIN .005

	NAME	DATE
DRAWN	E KURTEFF	8/24/17
CHECKED		

MONTEREY BAY AQUARIUM RESEARCH INSTITUTE

MBARI
7700 Sandholdt Rd.
Moss Landing, CA 95039
Phone: (831) 751-700

MATERIAL: BLACK DELRIN

FINISH

DO NOT SCALE DRAWING

PROPRIETARY AND CONFIDENTIAL
THE INFORMATION CONTAINED IN THIS DRAWING IS THE SOLE PROPERTY OF MBARI. ANY REPRODUCTION IN PART OR AS A WHOLE WITHOUT THE WRITTEN PERMISSION OF MBARI IS PROHIBITED.

TITLE: DELRIN COMPUTE HOUSING

SIZE	DWG. NO.	REV
B	Delrin Compute Housing	2

SCALE: 1:1 | WEIGHT: | SHEET 1 OF 1