THE INFORMATION CONTAINED IN THIS DRAWING IS THE SOLE PROPERTY OF MBARI ANY REPRODUCTION IN PART OR WHOLE WITHOUT THE WRITTEN PERMISSION OF MBARI IS PROHIBITED.

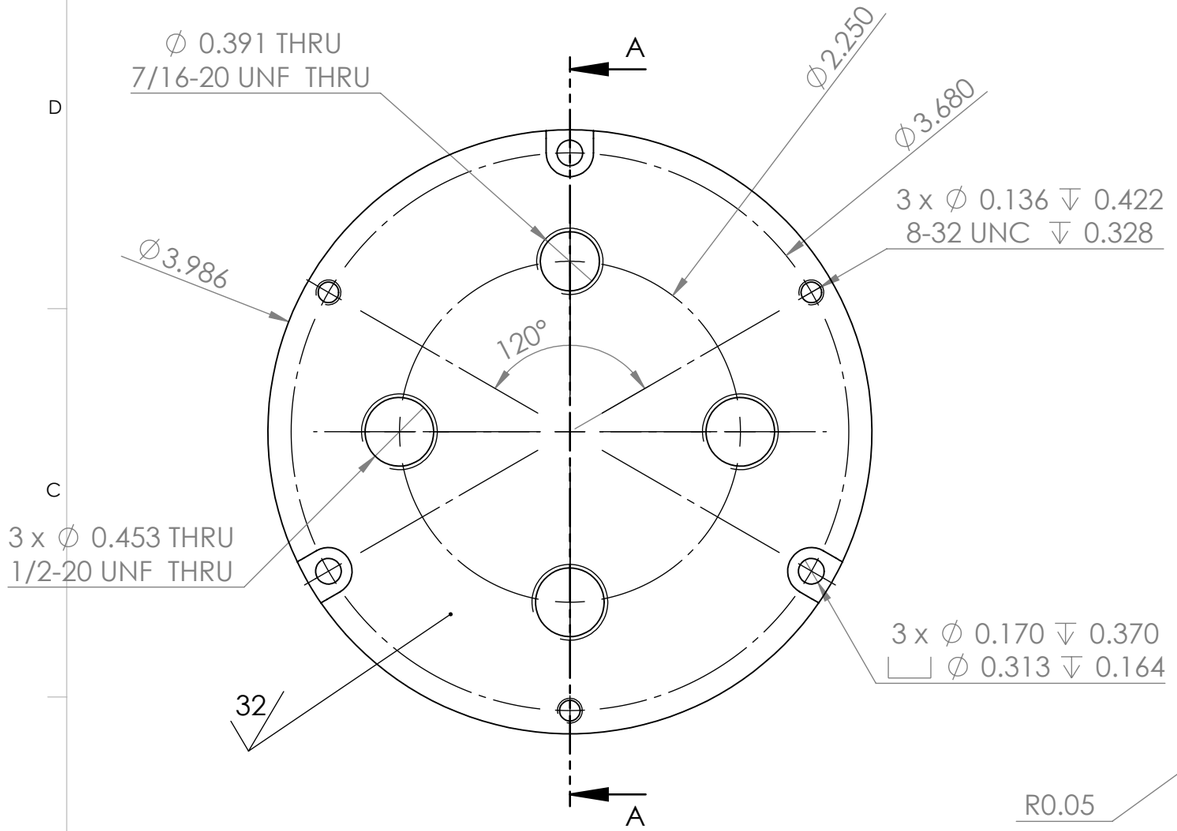

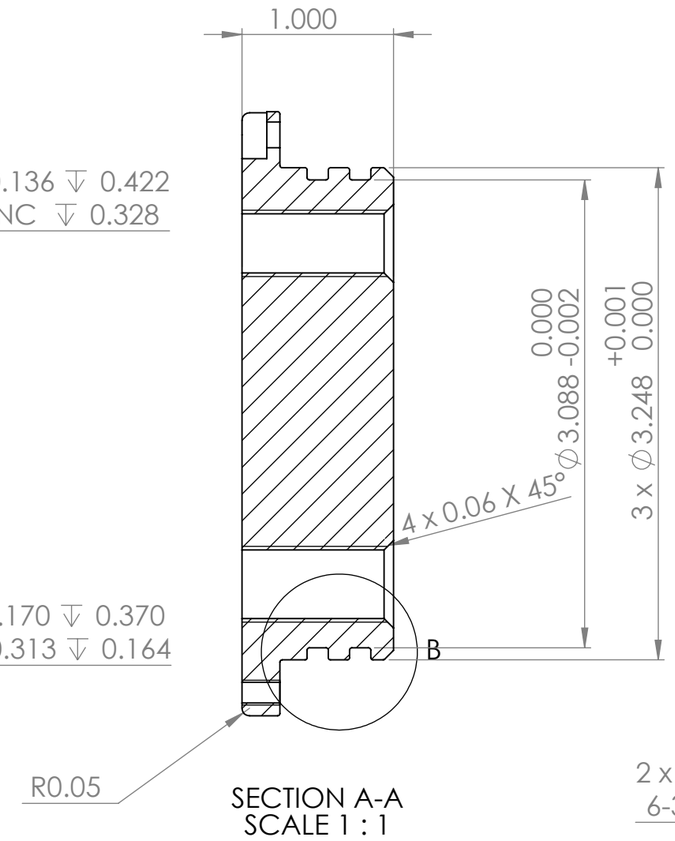

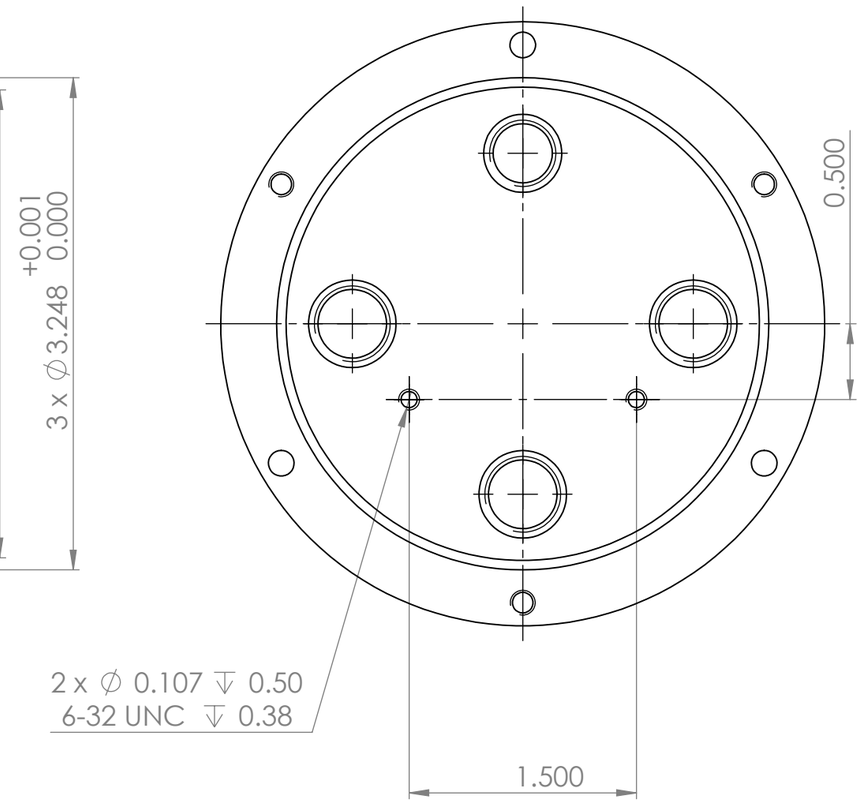

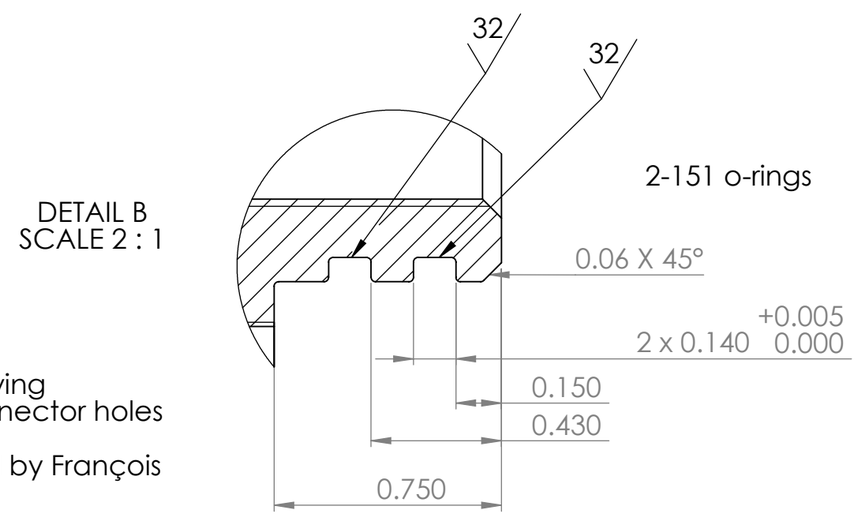

DETAIL B
SCALE 2 : 1

Make 1 as shown on drawing
Make 1 without the 4 connector holes

Material: 6AL4V, provided by François

UNLESS OTHERWISE SPECIFIED TOLERANCES ARE:			
1 PLACE DIM ±1/16	2 PLACE DIM ±.02	3 PLACE DIM ±.005	ANGLES ±1°

1. DIMENSIONS ARE IN INCHES
2. DIMENSION LIMITS HELD AFTER PLATING.
3. REMOVE BURRS AND SHARP EDGES .015 MAX.
4. MACHINED FILLET RADII .0150-.030.
5. MACHINED DIAMETERS ON A COMMON CENTERLINE CONCENTRIC WITHIN .005
6. PERPENDICULARITY & PARALLELISM OF MACHINED SURFACES .002 PER INCH, MAX .012 INCHES FOR SINGLE SURFACE.

DO NOT SCALE DRAWING

APPROVALS	DATE
DRAWN Francois Cazenave	
ENGINEER Francois Cazenave	
CHECKED	
PROJECT NO.	
PROJECT	
WEIGHT 1.34 lb.	

Monterey Bay Aquarium Research Institute
MBARI
7700 Sandholdt RD.
Moss Landing, CA 95039
PH: (831) 775-1700

Interface_Housing_Endcap

SIZE	DWG. NO.	REV.
B		

SCALE 1:2 SHEET 1 OF 1